a totalien brand

CORVALVE

VALVES & SEPARATORS

www.corvalve.net

CONTENTS

Lug Type Butterfly Valves	01
Wafer Type Butterfly Valves	03
Double Eccentric Butterfly Valves	05
Disco Type Check Valves	11
Swing Check Valves	12
Operated Check Valves	14
Ball Type Check Valves	16
Rubber Duckbill Check Valves	17
Elastomer Stem Gate Valves	20
Metal Seated Gate Valves	22
Flanged Type Globe Valves	24
Metal Bellows Globe Valves	26
Single Orifice Air Valves	28
Double Orifice Air Valves	30
Non Slam Dynamic Air Valves	32
Y-Type Strainer	33
Dismantling Joints	35
Electric Actuators	37
Pneumatic Actuators	41
Air Separator	45
Balancing Tank With Dirt And Air Separator	47
Combined Dirt And Air Separator	49
Dirt Separator	51
Horizontal Separator	53
Vertical Separator	54

Lug Type Butterfly Valve

CORVALVE

Lug Type Butterfly Valve with (Nickel, Stainless, Al-Bronze) Throttle is turned by 90 degrees around the axis perpendicular to the pipeline and 100% sealing is achieved with the lever and the gasket placed in the valve.

Application areas;

-Hot and cold water,
-Water distribution,
-Water treatment,
-Heating and cooling,
-Chemical fluids,-Food,
-Oil,-Textile,-Waste water,
-Steam

Flange Diameter ;

DN40-DN300

Nominal Pressure ;

PN16

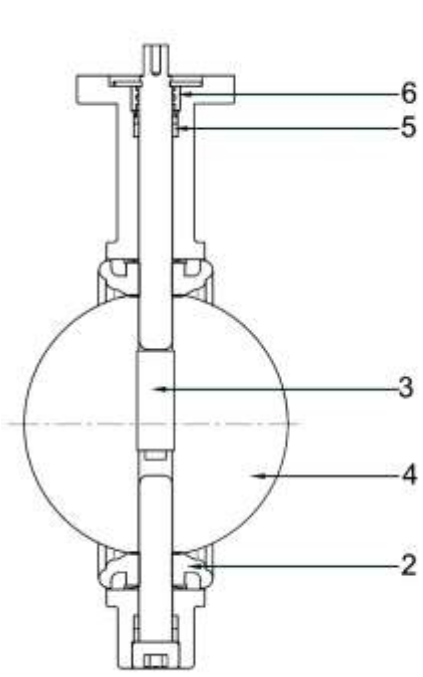

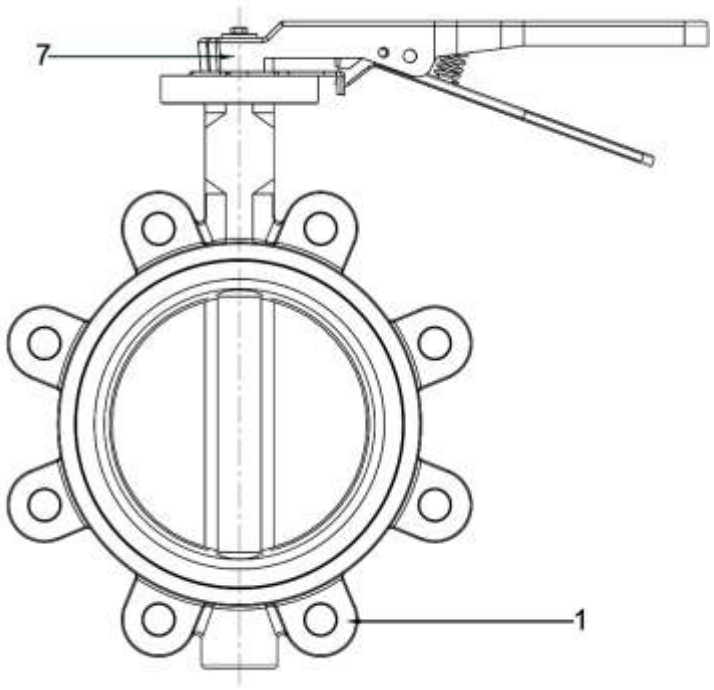

Standard Materials

1	Housing	GG 25
2	Gasket	EPDM
3	Shaft	AISI 410
4	Throttle	Al-Bronze / Nickel Plated / GGG 40 (Stainless)
5	Teflon	PTFE
6	O-ring	NBR
7	Lever	GGG 40

Lug Type Butterfly Valve

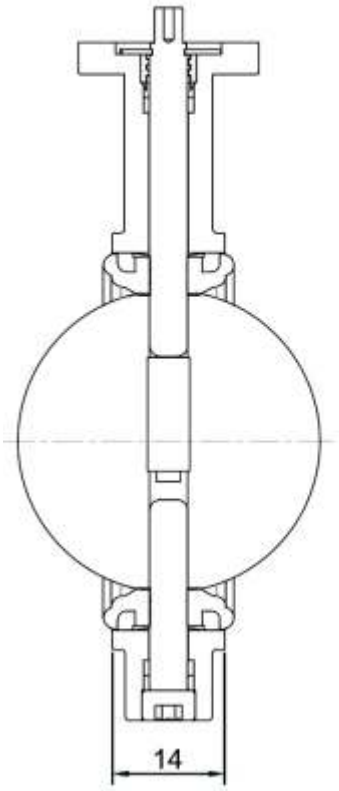

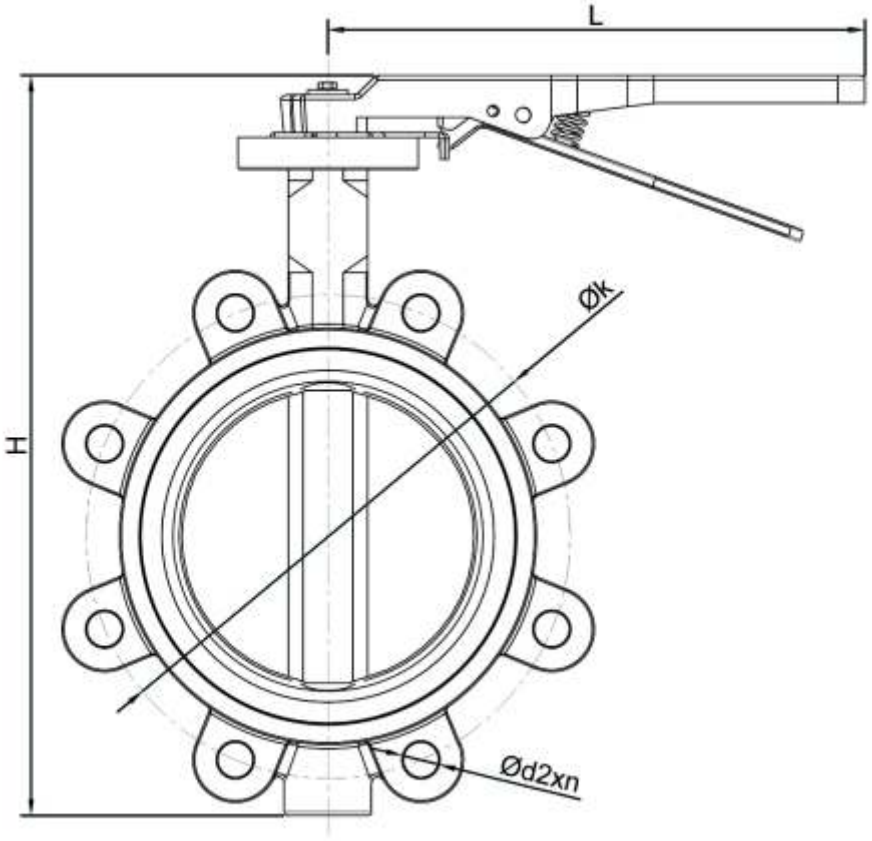

Connection Diameter		Dimensions					Nominal Pressure
DN	Inch	H	L	C	Øk	Ød2xn	PN
40	1 1/2"	200	240	33	110	Ø 18x4	16
50	2"	220	240	42	125	Ø 18x4	16
65	2 1/2"	243	240	45	145	Ø 18x4	16
80	3"	261	240	45	160	Ø 18x8	16
100	4"	293	240	52	180	Ø 18x8	16
125	5"	328	260	54	210	Ø 18x8	16
150	6"	366	260	56	240	Ø 23x8	16
200	8"	441	360	60	295	Ø 23x12	16
250	10"	520	500	65	355	Ø 27x12	16
300	12"	593	500	77	410	Ø 27x12	16

Wafer Type Butterfly Valve

CORVALVE

Wafer Type Butterfly Valve with (Stainless, Nickel, Al-Bronze) Throttle is turned by 90 degrees around the axis perpendicular to the pipeline and 100% sealing is achieved with the lever and the gasket placed in the valve.

Application areas;

-Hot and cold water,
-Water distribution,
-Water treatment,
-Heating and cooling,
-Chemical fluids,-Food,
-Oil,-Textile,-Waste water,
-Steam,

Flange Diameter ;

DN40-DN300

Nominal Pressure ;

PN16

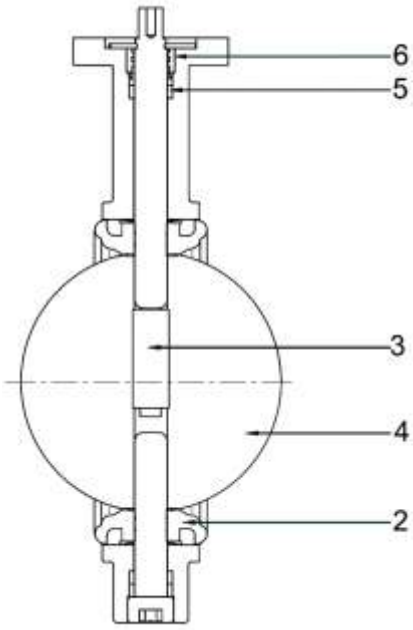

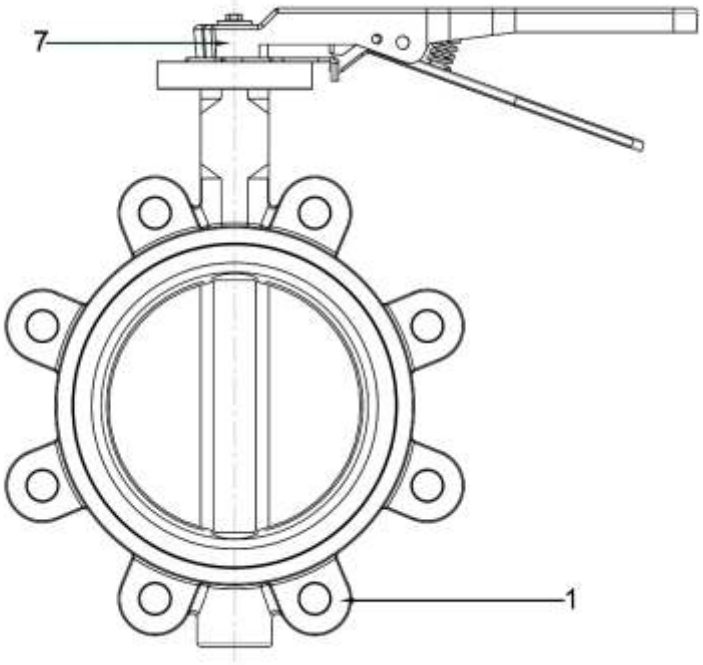

Standard Materials

1	Housing	GG 25
2	Gasket	EPDM
3	Shaft	AISI 410
4	Throttle	Al-Bronze / Nickel Plated / GGG 40 (Stainless)
5	Teflon	PTFE
6	O-ring	NBR
7	Lever	GGG 40

Wafer Type Butterfly Valve

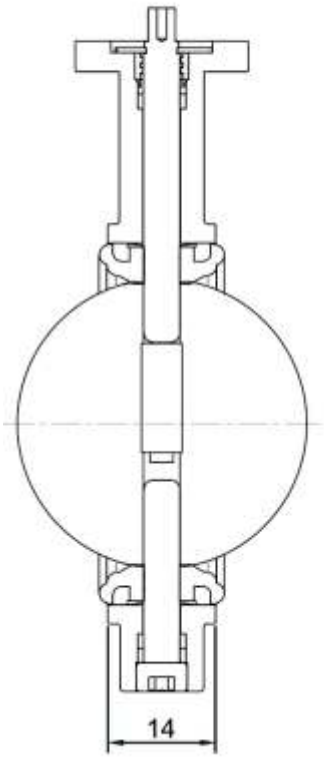

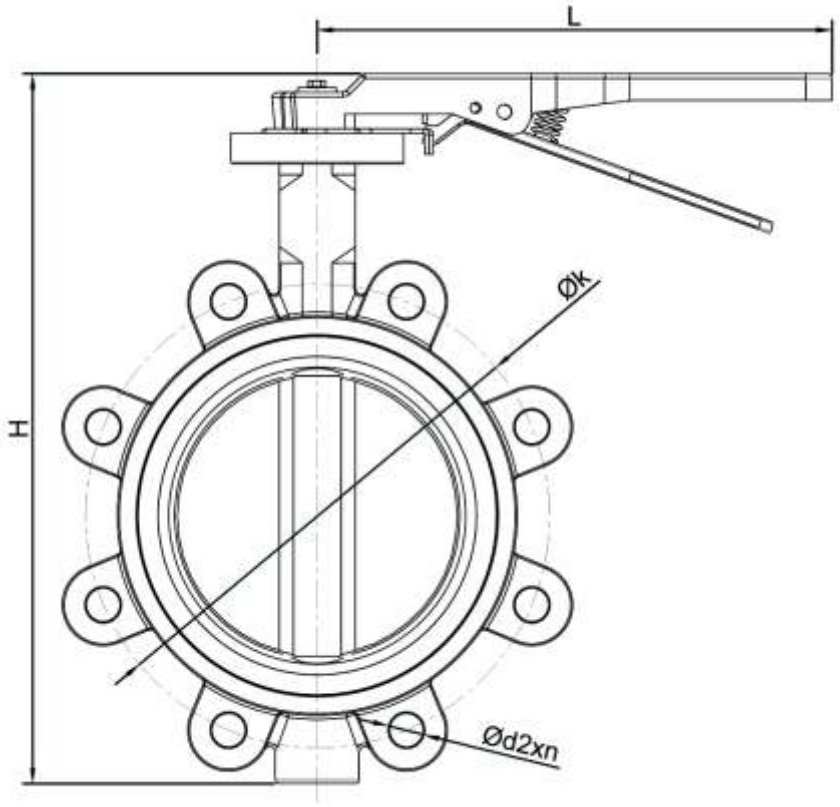

Connection Diameter		Dimensions					Nominal Pressure
DN	Inch	H	L	C	Øk	Ød2xn	PN
40	1 1/2"	200	240	33	110	Ø 18x4	16
50	2"	220	240	42	125	Ø 18x4	16
65	2 1/2"	243	240	45	145	Ø 18x4	16
80	3"	261	240	45	160	Ø 18x8	16
100	4"	293	240	52	180	Ø 18x8	16
125	5"	328	260	54	210	Ø 18x8	16
150	6"	366	260	56	240	Ø 23x8	16
200	8"	441	360	60	295	Ø 23x12	16
250	10"	520	500	65	355	Ø 27x12	16
300	12"	593	500	77	410	Ø 27x12	16

GENERAL INFORMATION

Valve body and discs/flaps are designed to provide minimum resistance. Sealing is provided by a t-section sealing ring which is circumferentially attached to the edge of the flap by a press ring. Precise tightness is ensured on both sides since the sealing ring on the clapper pushes the conical treated body site in the closed position. The sealing ring can be easily changed without disassembling the disc. Since the seat surface is made of hard chrome or AISI 316 stainless steel weld filler,the seat surface is resistant to abrasion and corrosion. Our butterfly valves are manufactured as double eccentric. The purpose of the first eccentric is as follows : the pressure on the rubber sealing ring is reduced, the abrasive effect is raised, and the continuous contact between the sealing ring and the body site is achieved. During opening of the valve, the rubber sealing ring is easily separated from the body seat with the help of the second eccentricity. The valve incorporates a two-piece shaft design which increases the cross- section. The shaft seal is made of bronze and delrin and the self-lubricating bushings are made on the O-ring system, ensuring that the valves are longer than maintenance.

Working Temperature: -10°C +90°C
Design: TS EN 593
Face to Face: TS EN 558-1
Flange Connection: EN 1092-2; ISO 7005-2
Accesory: Electrical Actuator

PRODUCT DESCRIPTION

- Double Eccentric Butterfly valves are operating by a circular body, by %100 tight sealing through quarter turn (90 degree) disc rotating around its own axis.
- Robust welded (AISI 308-316 LSI) and high precision machined stainless steel surface
- Perfect sealing on the stem with multi oring system on the front and rear seals
- High corrosion resistance and high strength bronze bush
- Minimum AISI 420 stainless steel mill with blade connection.
- AISI 420 Stainless Steel Stems with clamp connection
- The body is coated with electrostatic fusion bonded epoxy (FBE) with WRAS Approval

MATERIAL SPECIFICATONS

PART NO	PART NAME	MATERIAL	EXPLANATION
1	BODY	EN-GJS 400-500(GGG40,GGG50)	DUCTILE IRON
2	DISC	EN-GJS 400-500(GGG40,GGG50)	DUCTILE IRON
3	RETAINING RING	ST37 / SS304	ST37 / SS 304
4	DISC GASKET	EPDM / NBR	RUBBER
5	BOLT FOR COVER	A2 / Stainless Steel	-
6	SETSCREW	A2 / Stainless Steel	-
7	LONG STEM	X20CR13 / 316L	-
8	SHORT STEM	X20CR13 / 316L	-
9	BUSH	BRONZ / BRONZE	BRONZE
10	COVER	EN-GJS-500(GGG50)	DUCTILE IRON
11	BOLT FOR COVER	A2 / Stainless Steel	-
12	O-RING	EPDM	-
13	KEY	Ck45	-
14	COVER	EN-GJS-500(GGG50)	DUCTILE IRON
15	GEARBOX	-	-

TECNICAL SPECIFICATONS

Nominal Diameter:
DN100,125,150,200,250,300,350,400,450,500,550,600,700,800,900,1000,1100,1200,1300,1400,1500,1600,1800,2000,2200.

Pressure Nominal:
PN10-16-25-40

Standards:
TS EN 558 SERİ14,DIN3202 F4,TS EN 593+A1, TS EN 1092-2

Casting Standard:
EN 1563:2011(EN)

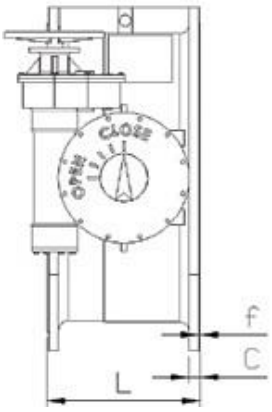

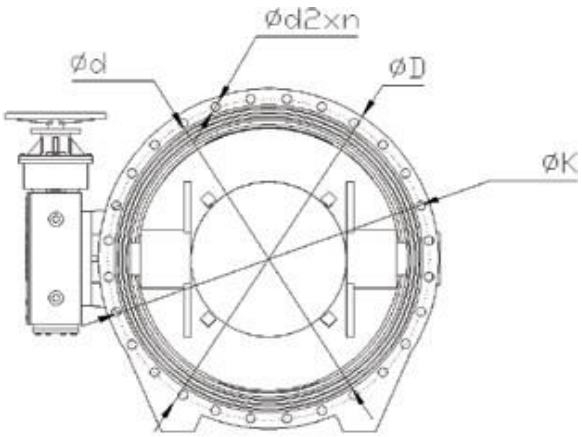

DN	PN 10							PN 16						PN 25						PN 40				
DN	L	f	ØD	ØK	Ød	C	d2xn	ØD	ØK	Ød	C	d2xn	ØD	ØK	Ød	C	d2xn	ØD	ØK	Ød	C	d2xn
100	190	3	220	180	156	19	19x8	220	180	156	19	19x8	235	190	156	19	23x8	235	190	156	19	23x8
125	200	3	250	210	184	19	19x8	250	210	184	19	19x8	270	220	184	19	28x8	270	220	184	23,5	28x8
150	210	3	285	240	211	19	23x8	285	240	211	19	23x8	300	250	211	20	28x8	300	250	211	26	28x8
200	230	3	340	295	266	20	23x8	340	295	266	20	23x12	380	310	274	22	28x12	375	320	284	30	31x12
250	250	3	405	350	319	22	23x12	405	355	319	22	28x12	425	370	330	24,5	28x16	450	385	345	34,5	34x12
300	270	4	460	400	370	24,5	23x12	460	410	370	24,5	28x12	485	430	389	27,5	31x16	515	450	409	39,5	34x16
350	290	4	505	460	429	24,5	23x16	520	470	429	26,5	28x16	555	490	448	30	34x16	580	510	465	44	37x16
400	310	4	565	515	480	24,5	28x16	580	525	480	28	31x16	620	550	503	32	37x16	660	585	535	48	41x16
450	330	4	615	565	530	25,5	28x20	640	585	548	30	31x20	670	600	548	34,5	37x20	685	610	560	49	41x20
500	350	4	670	620	582	28,5	28x20	715	650	609	31,5	34x20	730	660	609	36,5	37x20	755	670	615	52	44x20
600	390	5	780	725	682	30	31x20	840	770	720	36	37x20	845	770	720	42	41x20	890	795	735	58	50x20
700	430	5	895	840	794	32,5	31x24	910	840	794	39,5	37x24	960	875	820	46,5	44x24	995	900	840	64	50x24
800	470	5	1015	950	901	35	34x24	1025	950	901	43	41x24	1085	990	928	51	50x24	1140	1030	960	72	57x24
900	510	5	1115	1050	1001	37,5	34x28	1125	1050	1001	46,5	41x28	1165	1090	1028	55,5	50x28	1250	1140	1070	80	57x28
1000	550	5	1230	1160	1112	40	37x28	1255	1170	1112	50	44x28	1320	1210	1140	60	57x28	1360	1250	1180	95	57x28
1100	590	5	1355	1270	1218	53,5	37x32	1355	1270	1218	53,5	44x32	1420	1310	1240	64,5	57x32	-	-	-	-	-
1200	630	5	1455	1380	1328	45	41x32	1485	1390	1328	57	50x32	1530	1420	1350	69	57x32	1575	1460	1380	95	62x32
1300	670	5	1585	1490	1432	59	42x32	1585	1490	1432	59	50x32	-	-	-	-	-	-	-	-	-	-
1400	710	5	1675	1590	1530	46	44x36	1685	1590	1530	60	50x36	1755	1640	1560	74	62x36	1795	1680	1600	105	62x36
1500	750	5	1820	1700	1640	47	44x36	1820	1710	1640	62,5	57x36	1865	1750	1678	77,5	62x36	-	-	-	-	-
1600	790	5	1915	1820	1750	49	50x40	1930	1820	1750	65	57x40	1975	1860	1780	81	622x40	2025	1900	1815	120	70x40
1800	870	5	2115	2020	1950	52	50x44	2130	2020	1950	70	57x44	2195	2070	1985	88	70x44	2240	2110	2010	165	70x48
2000	950	5	2325	2230	2150	55	50x48	2345	2230	2150	75	62x48	2425	2300	2210	95	70x48	-	-	-	-	-
2200	1030	6	2555	2440	2370	65	57x52	2555	2440	2360	80	62x52	-	-	-	-	-	-	-	-	-	-

DN	Kv VALUES OF BUTTERFLY VALVE							
	Kv VALUES AT VARIOUS OPENING POSITIONS							
DEGREE	20°	30°	40°	50°	60°	70°	80°	90°
DN 100	12.3	26.5	62.1	124.3	168.3	312	496	625
DN 150	51.2	104	173	276	442	717	1042	1186
DN 200	108	191	304	489	794	1261	1855	2153
DN 250	177	310	486	769	1243	1990	2898	3363
DN 300	252	446	699	1098	1787	2836	4215	4844
DN 350	347	613	942	1485	2455	4256	6592	8814
DN 400	454	799	1229	1957	3210	5544	8620	11580
DN 450	579	910	1573	2494	4089	7079	10897	14490
DN 500	710	1240	1960	3055	4964	8685	13320	17800
DN 600	1009	1762	2768	4399	7074	12255	19573	25365
DN 700	1362	2423	3766	5988	9630	16845	25835	34540
DN 800	1779	3039	4875	7830	12640	21785	33745	45095
DN 900	2239	3923	6164	9792	16084	27568	43148	57080
DN 1000	2779	4944	7609	12202	194448	34040	52725	70458

Kv Values are given in m3 / s.
Kv values are calculated according to the following values :the maximum fluid velocity is 5 m / s, the pressure difference is 1 bar and the fluid temperature is between 5 ° C and 30 ° C.

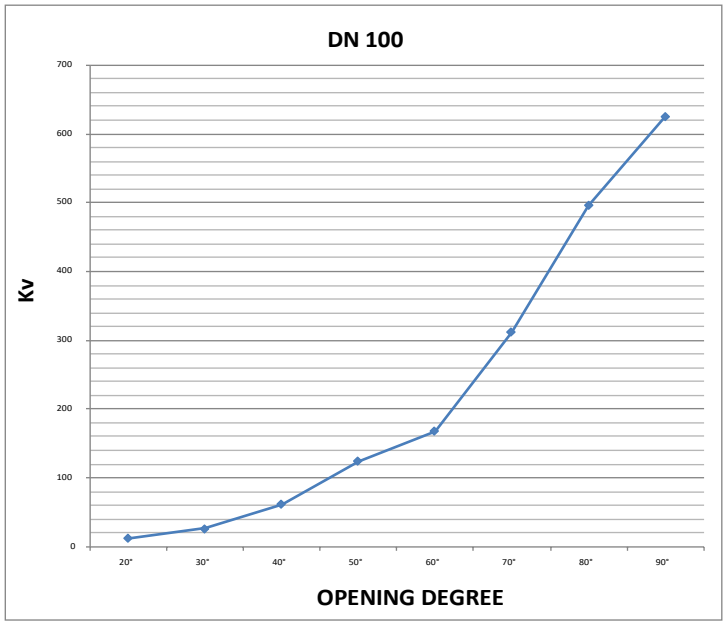
DN 100
Kv
700
600
500
400
300
200
100
0
20°
30°
40°
50°
60°
70°
80°
90°
OPENING DEGREE

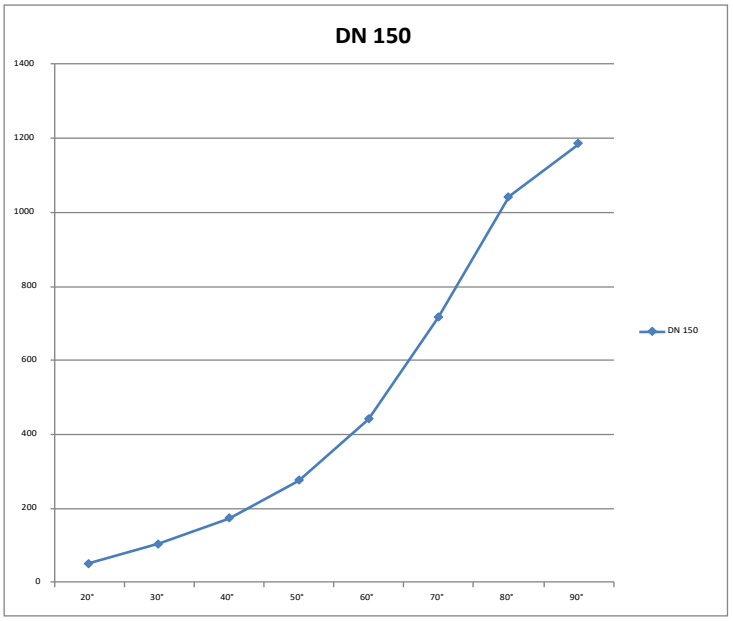
DN 150
1400
1200
1000
800
600
400
200
0
20°
30°
40°
50°
60°
70°
80°
90°
DN 150

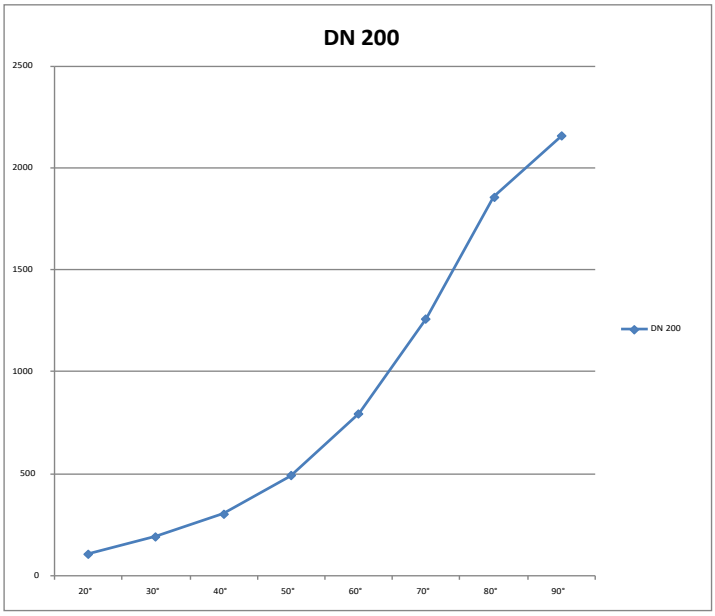
DN 200
2500
2000
1500
1000
500
0
20°
30°
40°
50°
60°
70°
80°
90°
DN 200

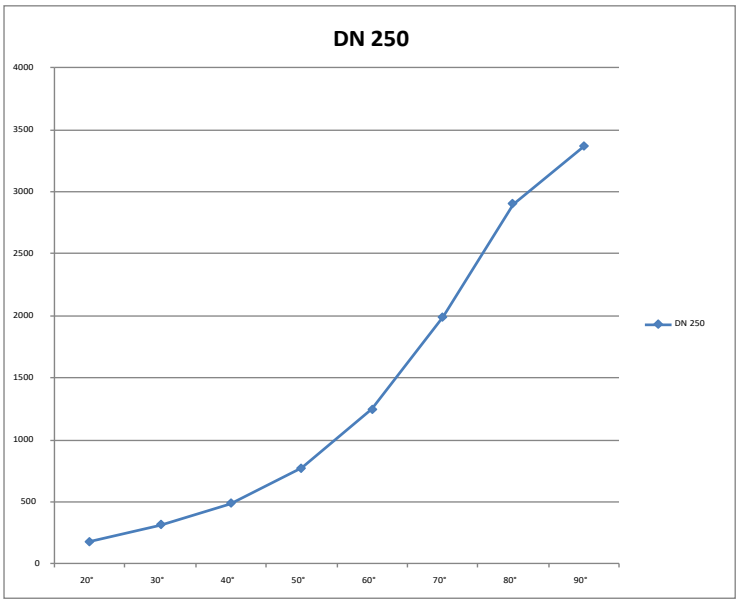
DN 250
4000
3500
3000
2500
2000
1500
1000
500
0
20°
30°
40°
50°
60°
70°
80°
90°
DN 250

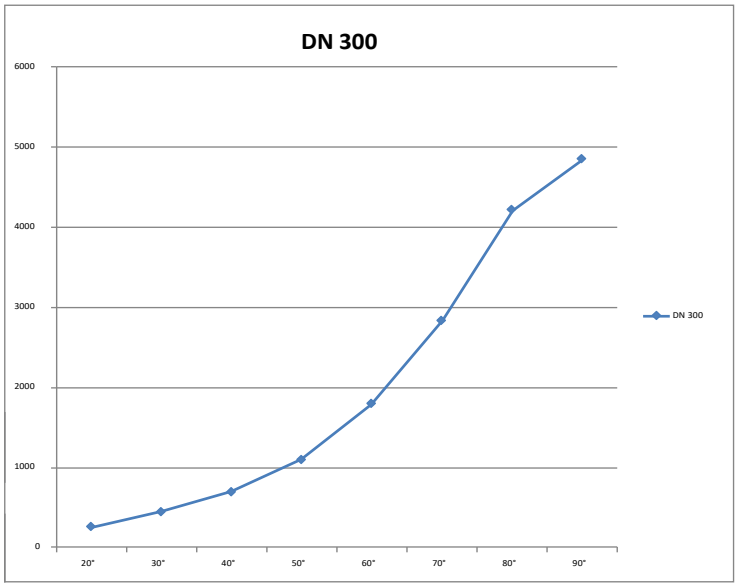
DN 300
6000
5000
4000
3000
2000
1000
0
20°
30°
40°
50°
60°
70°
80°
90°
DN 300

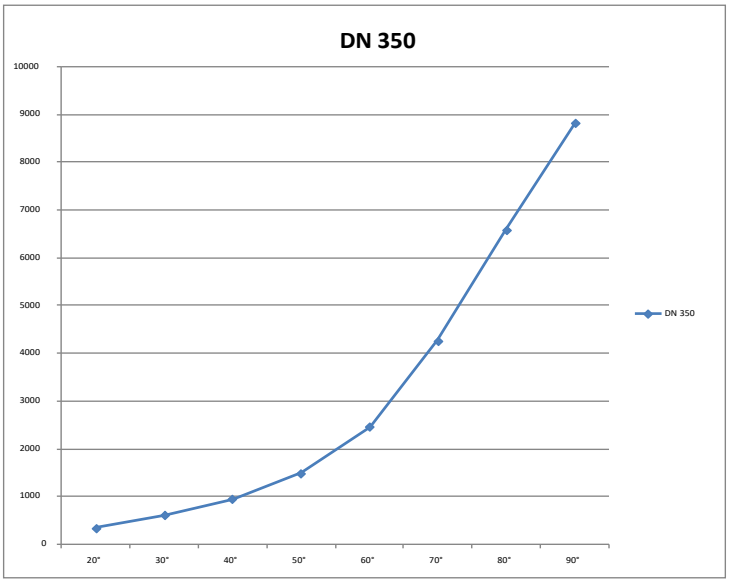
DN 350
10000
9000
8000
7000
6000
5000
4000
3000
2000
1000
0
20°
30°
40°
50°
60°
70°
80°
90°
DN 350

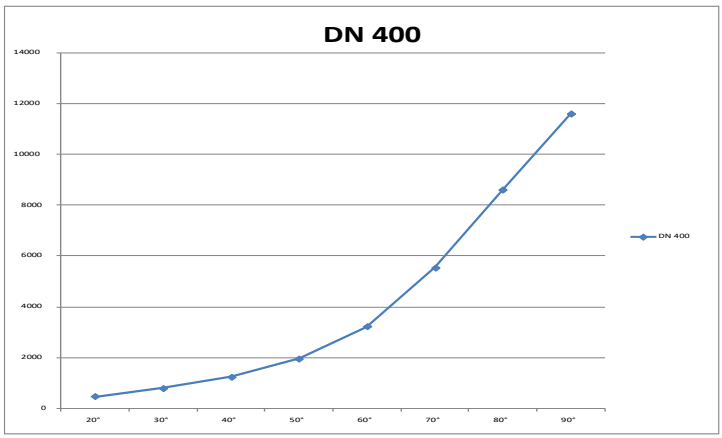
DN 400
14000
12000
10000
8000
6000
4000
2000
0
20°
30°
40°
50°
60°
70°
80°
90°
DN 400

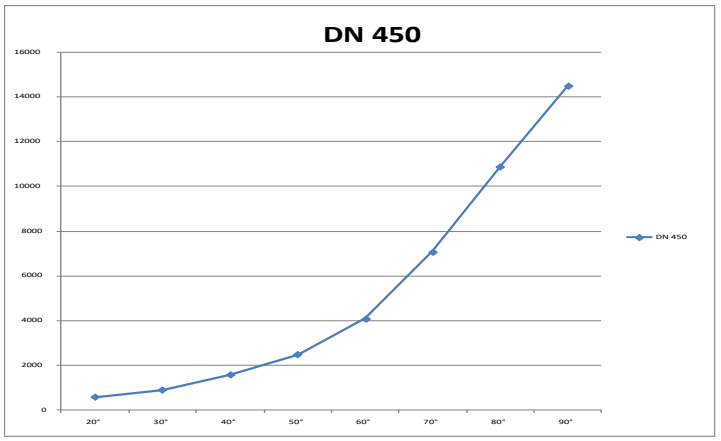
DN 450
16000
14000
12000
10000
8000
6000
4000
2000
0
20°
30°
40°
50°
60°
70°
80°
90°
DN 450

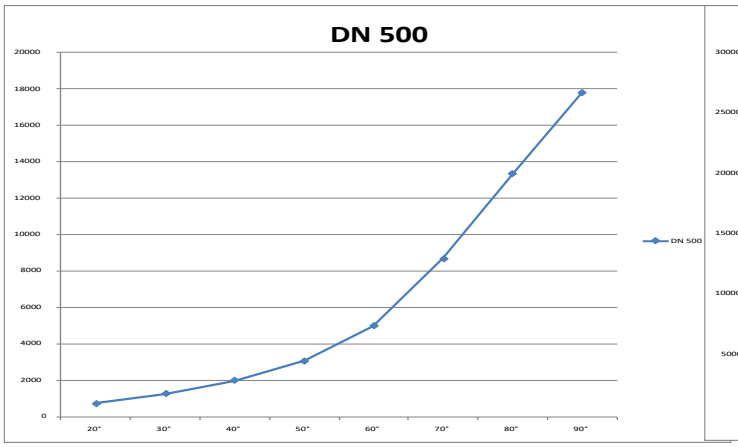
DN 500
20000
18000
16000
14000
12000
10000
8000
6000
4000
2000
0
20°
30°
40°
50°
60°
70°
80°
90°
DN 500

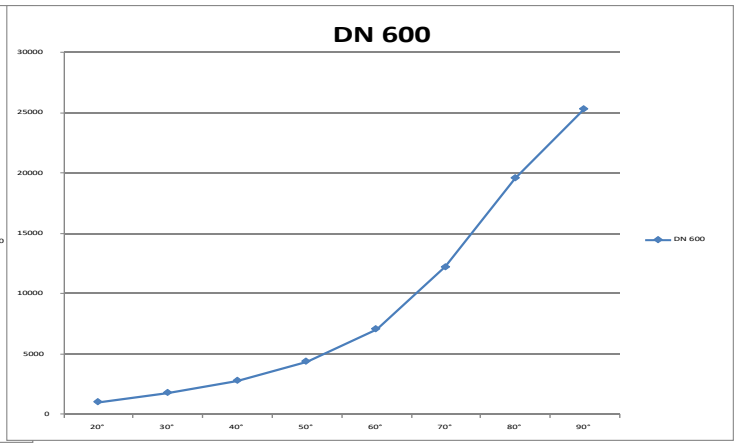
DN 600
30000
25000
20000
15000
10000
5000
0
20°
30°
40°
50°
60°
70°
80°
90°
DN 600

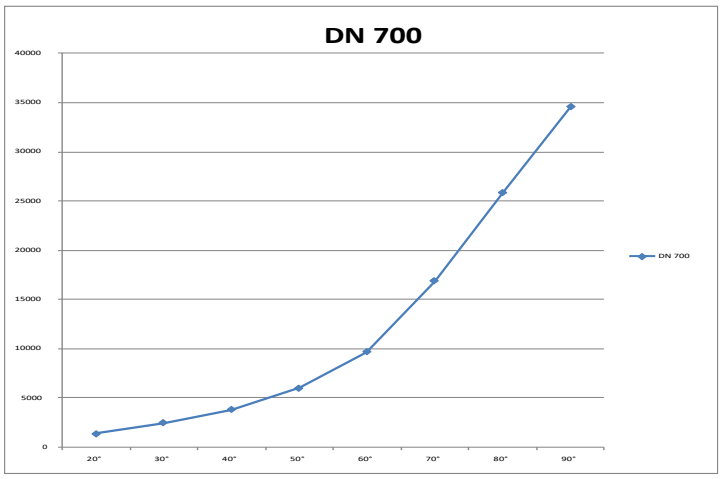
DN 700
40000
35000
30000
25000
20000
15000
10000
5000
0
20°
30°
40°
50°
60°
70°
80°
90°
DN 700

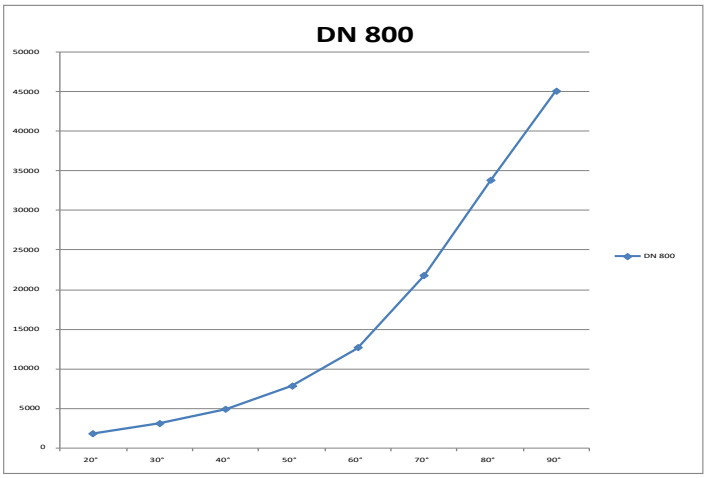
DN 800
50000
45000
40000
35000
30000
25000
20000
15000
10000
5000
0
20°
30°
40°
50°
60°
70°
80°
90°
DN 800

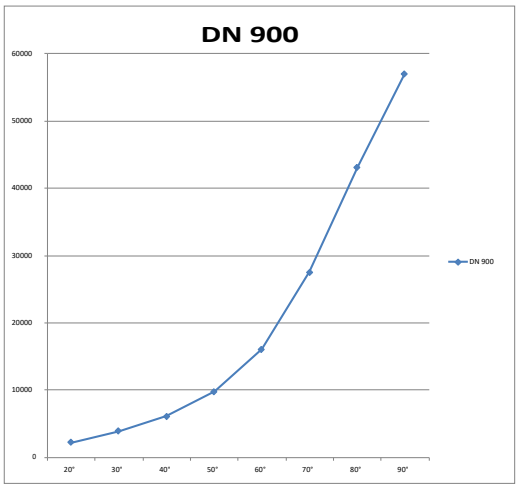
DN 900
60000
50000
40000
30000
20000
10000
0
20°
30°
40°
50°
60°
70°
80°
90°
DN 900

Disco Type Check Valves

Disco checkvalves are advantageous and practical products thanks to feautures such as short installation distance, saving from space and easy installation capability.Allowing desired flow direction of fluid in the installation and not allowing its flow in the reverse direction, Disco checkvalves ensures that flow is unidirectional.

Applications;

-Fluids such as liquids,
-Gasses,
-Vapour,

Connection Diameter ;

-Brass (DN15-DN100),
-Carbon steel (DN40-DN100),
-Stainless (DN20-DN100)

Maximum Operating Pressure;

-Brass (PN16),
-Carbon steel (PN40),
-Stainless (PN40).

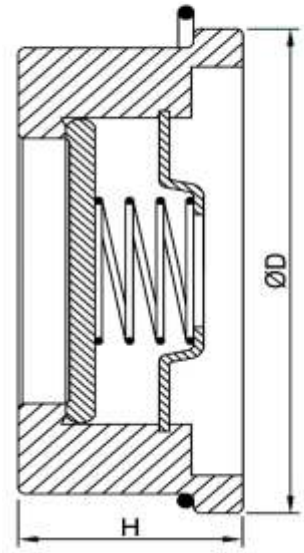

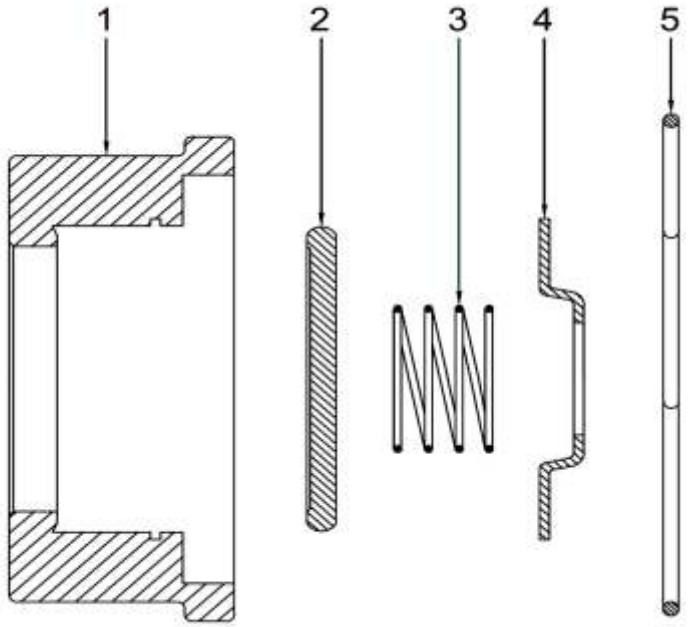

Standart Materials

1	Housing	Stainless steel/Carbon steel/MS58 Brass
2	Valve	Stainless steel
3	Closing spring	Stainless steel
4	Spring holder	Stainless steel
5	Centering ring	Stainless steel/Carbon steel

Connection Diameter		Dimensions	
DN	Inch	B	H
15	1/2"	41	16
20	3/4"	47	19
25	1"	56	21
32	1 1/4"	72	28
40	1 1/2"	82	32
50	2"	95	39
65	2 1/2"	115	46
80	3"	132	50
100	4"	152	60

Swing Check Valves

CORVALVE

Swing check valve allows the fluid to progress the desired flow path in the installation, hinged to the disk body in the check valve when it begins moving direction of flow for the system, the hinge axis of the fluid pressure allows the return flow.

Applications;

-Hot and cold water lines,
-Acid and alkaline non flammable fluids,
-Chemical fluids

Connection Diameter ;

-Casting Flange- Carbon steel
-Stainless(DN20-DN100)

Maximum Operating Pressure ;

-Casting Flange(PN16) ,
-Carbon steel-Stainless(PN10)

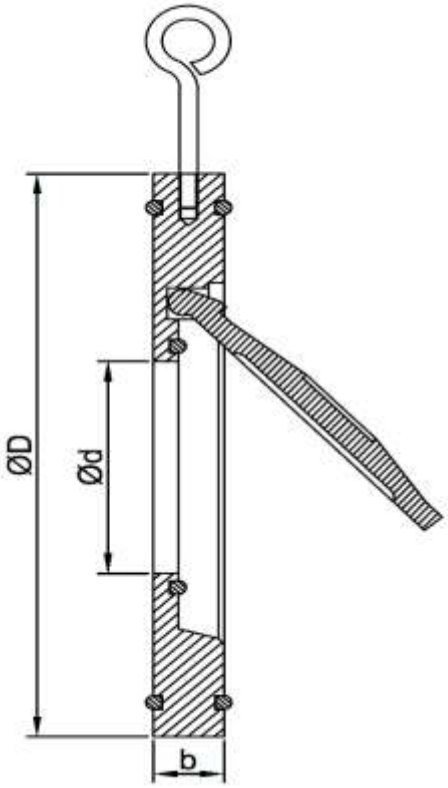

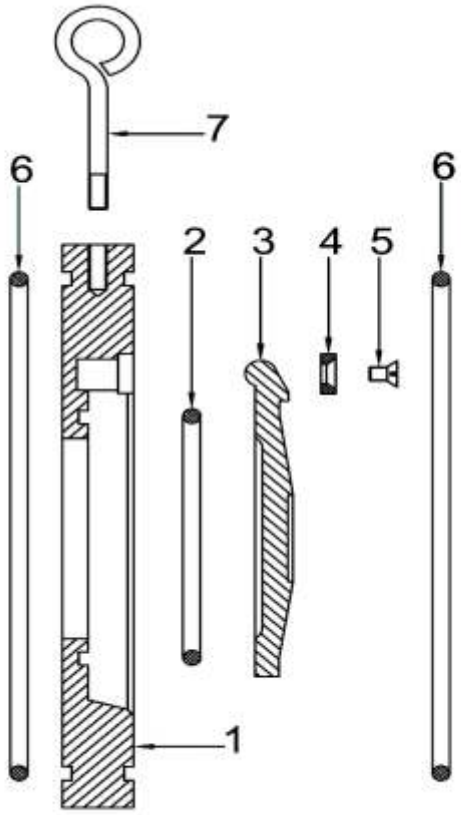

Standart Materials

1	Housing	Carbon steel
2	O-ring	EPDM rubber
3	Valve	Carbon steel
4	Washer	Carbon steel
5	Screw	Carbon steel
6	O-ring	EPDM rubber
7	Hook	Carbon steel

Connection Diameter / Dimensions

DN	Inch	ØD	Ød	b
40	1 1/2"	38	22	14
50	2"	48	32	14
65	2 1/2"	63	40	14
80	3"	74	54	14
100	4"	90	70	18
125	5"	117	92	18
150	6"	140	114	20
200	8"	180	154	22
250	10"	328	200	26
300	12"	384	235	28

Operated Check Valves

CORVALVE

Operated Check Valve provides the required progress in the direction of flow of the fluid in the system and stop the reverse flow.

Scope of application;

-Hot and cold water,
-Chemical fluids,
-For non-acidic and alkaline liquids,
-Steam

Connection Diameter ;

DN15-DN200

Nominal Pressure ;

PN16

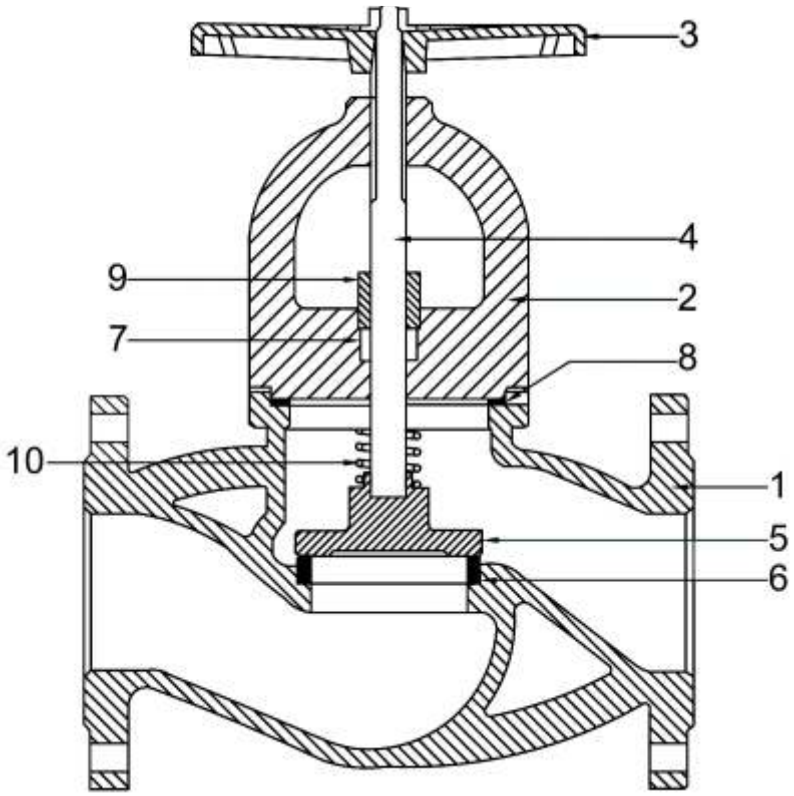

Standart Materials

1	Body	GG 25
2	Cover	GG 25
3	Flywheel	GG 25
4	Shaft	AISI 420 (Stainless steel)
5	Clack	AISI 420 (Stainless steel)
6	Protected	AISI 304 (Stainless steel)
7	Packing	Graphite
8	Gasket	Klingerit
9	The gland	Brass forged
10	Spring	AISI 302 (Stainless steel)

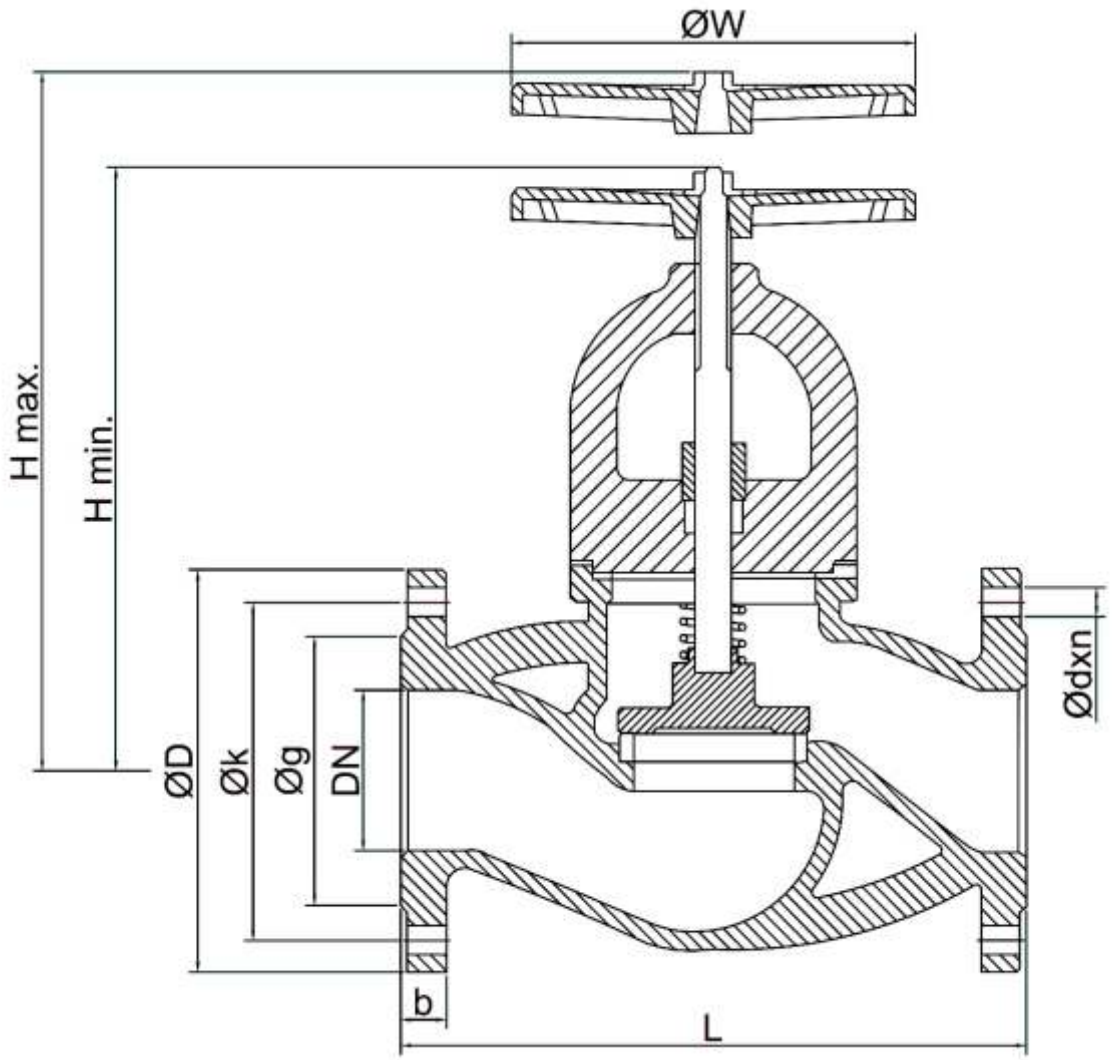

Connection Diameter		Dimensions									Nominal Pressure
DN	Inch	L	H min.	H max.	ØW	ØD	Øk	Øg	b	Ødxn	PN
15	1/2"	130	185	200	125	95	65	46	14	Ø14x4	16
20	3/4"	150	190	200	125	105	75	56	16	Ø14x4	16
25	1"	160	215	230	125	115	85	65	16	Ø14x4	16
32	1 1/4"	180	220	240	125	140	100	76	18	Ø19x4	16
40	1 1/2"	200	235	275	160	150	110	84	18	Ø19x4	16
50	2"	230	245	310	160	165	125	99	20	Ø19x4	16
65	2 1/2"	290	265	310	200	185	145	118	20	Ø19x4	16
80	3"	310	290	345	200	200	160	132	22	Ø19x8	16
100	4"	350	310	395	250	220	180	156	24	Ø19x8	16
125	5"	400	365	455	315	250	210	184	26	Ø19x8	16
150	6"	480	425	535	315	285	240	211	26	Ø23x8	16
200	8"	600	570	680	400	340	295	266	30	Ø23x12	16

There is a mobile ball inside the check valve. Rolling with the fluid, this constantly moving ball with special surface cover cleans itself and prevents dirt accumulation in its periphery and ensures operation of check valve without jamming.

Scope of application;

-Fluids with high viscosity including,
-Chemical fluids,
-Process waste water and muddy water,
-Cesspool.

Connection Diameter ;

DN25-DN65

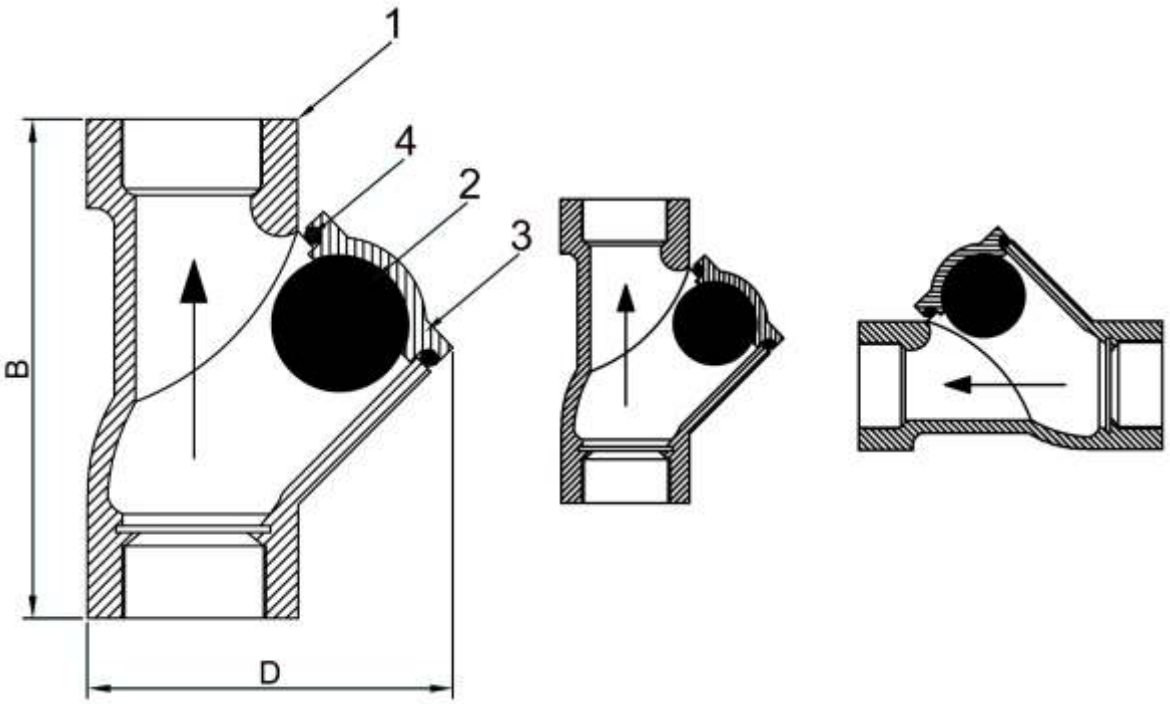

Standart Materials

1	Housing	Pig casting
2	Ball	Hardened epoxy resin
3	Maintenance lid	Pig casting
4	O-ring	EPDM rubber

Connection Diameter / Dimensions

DN	Inch	B	D
25	1"	38	22
32	1 1/4"	48	32
40	1 1/2"	63	40
50	2"	74	54
65	2 1/2"	90	70

Rubber Check Valves from are specifically designed for use in sewage treatment plants, outfalls, and tidal operations. They're a cost-effective solution for controlling back pressures, and are a fully passive flow device, requiring no maintenance, no outside power sources or manual assistance to operate.

Rubber check valves are recommended as direct replacements for ineffective, maintenance-ridden flap type check valves, which are commonly known to seize, rust, or bind in unwanted positions. Rubber duckbill check valves provide backflow protection from occurrences including:

- Sewage slurries
- Outfalls to ocean fronts from heavy rainfall activity
- Land erosion due to back flow conditions
- Invasion of saltwater to freshwater pond

<u>Applications Include:</u>

- Wastewater treatment plants
- Sewer systems
- Potable water holding tanks, single in/single out only (including tank overflow pipes)
- Pump protection (water hammer/valve slam)
- Airport runways, parking lots, residential areas, commercial centers
- Stormwater Discharge
- Flood Control Prevention
- Effluent Diffusers
- Retrofit Systems
- Mining Outfall and Tailings Pond Overflow Pipe

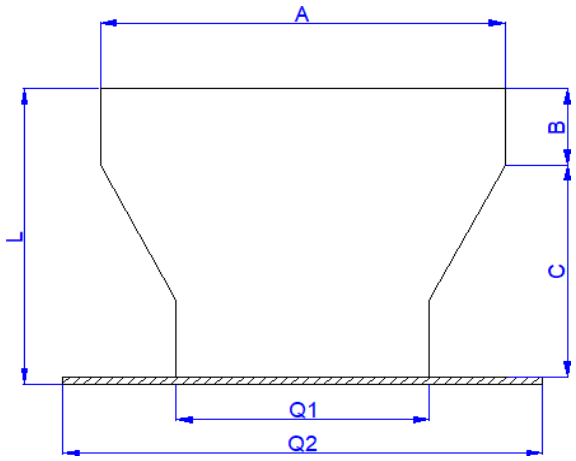

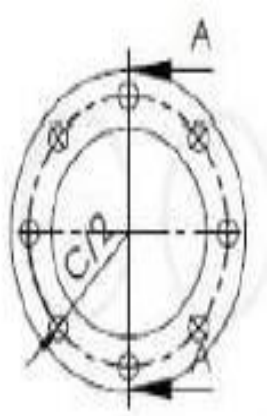

Valve Dimensions							Flange Dimensions						
Product code	Ø1 (mm)	A (mm)	B (mm)		L (mm)		Ø2 (mm)	C (mm)	(mm)	Hole Diameter (mm)	Hole Number	TOTAL WEIGHT (kg)	
			Diffuser	Discharge	Diffuser	Discharge						Diffuser	Discharge
DB 150	150	247	308	64	524	279	285	240	24	22	8	15	11
DB 200	200	306	380	79	643	342	340	295	26	22	12	22	16
DB 250	250	380	445	93	752	399	405	355	29	26	12	33	23
DB 300	300	480	480	100	812	432	460	410	32	26	12	44	31
DB 350	350	540	584	122	984	521	520	470	35	26	16	67	47
DB 400	400	605	620	129	1045	554	580	525	38	30	16	78	56
DB 450	450	645	687	143	1158	613	640	585	42	30	20	97	71
DB 500	500	750	716	149	1209	642	715	650	46	33	20	132	97
DB 600	600	880	872	182	1472	781	840	770	55	36	20	197	140
DB 700	700	950	884	184	1499	798	910	840	63	36	24	220	150
DB 800	800	1220	984	205	1673	894	1020	950	74	39	24	255	165
DB 900	900	1320	1080	225	1837	982	1125	1050	82	39	28	295	180
DB1000	1000	1430	1333	278	2256	1200	1255	1170	90	42	28	237	195
DB1200	1200	1430	1392	290	2360	1258	1485	1390	98	48	32	390	210

Rubber Duckbill Check Valve (Clamped)

CORVALVE

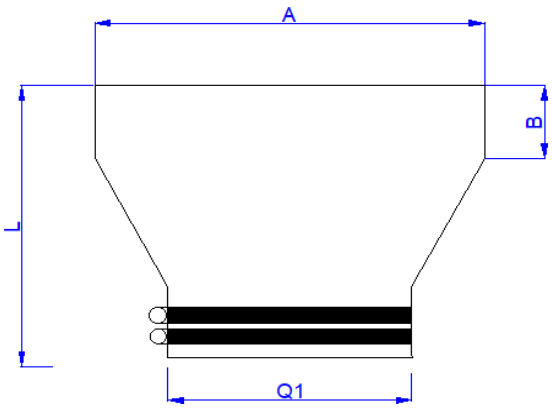

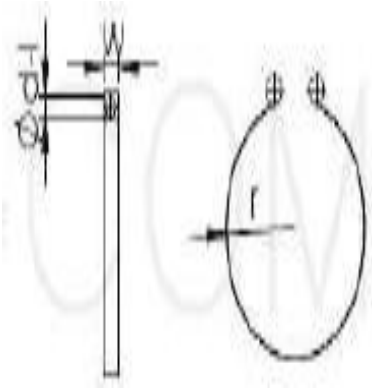

Valve Dimensions							Clamp Dimensions					
Product code	Ø1 (mm)	A (mm)	B (mm)		L (mm)		Ø2 (mm)	Width K (mm)	t (mm)	PCS	TOTAL WEIGHT (kg)	
			Diffuser	Discharge	Diffuser	Discharge					Diffuser	Discharge
DCV 150	150	247	308	64	524	279	183	25	24	2	8	5
DCV 200	200	306	380	79	643	342	246	25	26	2	13	7
DCV 250	250	380	445	93	752	399	300	25	29	2	21	11
DCV 300	300	480	480	100	812	432	360	30	32	2	25	12
DCV 350	350	540	584	122	984	521	500	25	35	2	41	21
DCV 400	400	605	620	129	1045	554	480	30	38	2	55	23
DCV 450	450	645	687	143	1158	613	530	40	42	2	50	28
DCV 500	500	750	716	149	1209	642	580	40	46	2	75	40
DCV 600	600	880	872	182	1472	781	680	40	55	2	105	58
DCV 700	700	950	884	184	1499	798	780	40	63	4	120	70
DCV 800	800	1220	984	205	1673	894	890	40	74	4	140	90
DCV 900	900	1320	1080	225	1837	982	1000	45	82	4	160	110
DCV1000	1000	1430	1333	278	2256	1200	1100	45	90	4	237	195
DCV1200	1200	1430	1392	290	2360	1258	1300	50	98	4	390	210

Gate Valves with Elastomer Stem Seal are operated by turning the control shaft multiple times in a perpendicular position to the flow direction of the iron stem coated with EPDM Rubber.

Areas of application;

-Hot and cold water
-Fluids that do not show acidic or alkaline properties.

Flange Diameter ;

DN40-DN600

Nominal Pressure ;

PN16

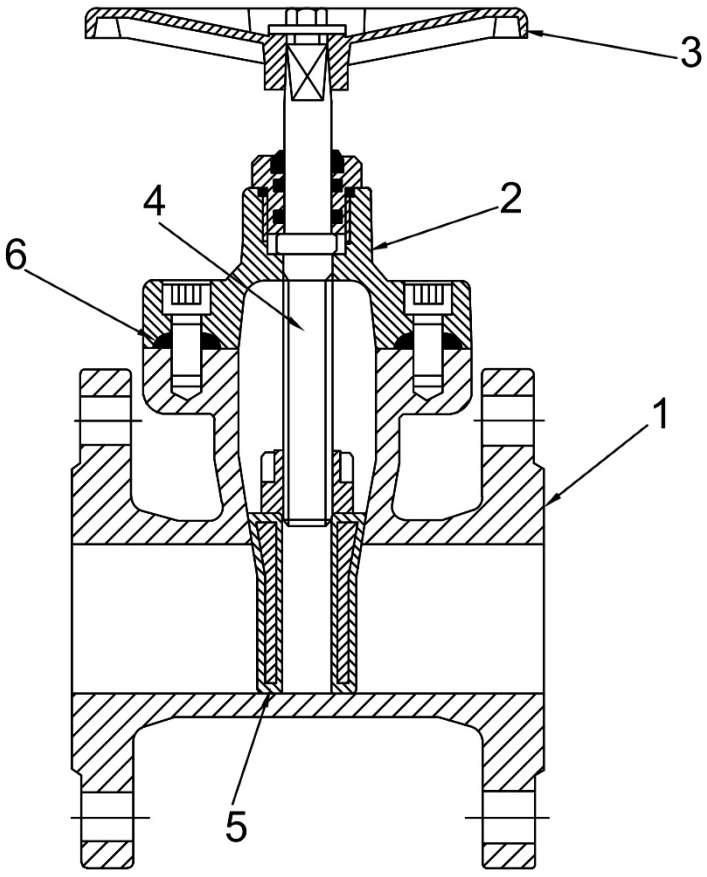

Standart Materials

1	Housing	GG 25
2	Cover	GG 25
3	Flywheel	GG 20
4	Shaft	Stainless steel
5	Stem	GGG40 (Rubber coated)
6	Gasket	NBR / EDM

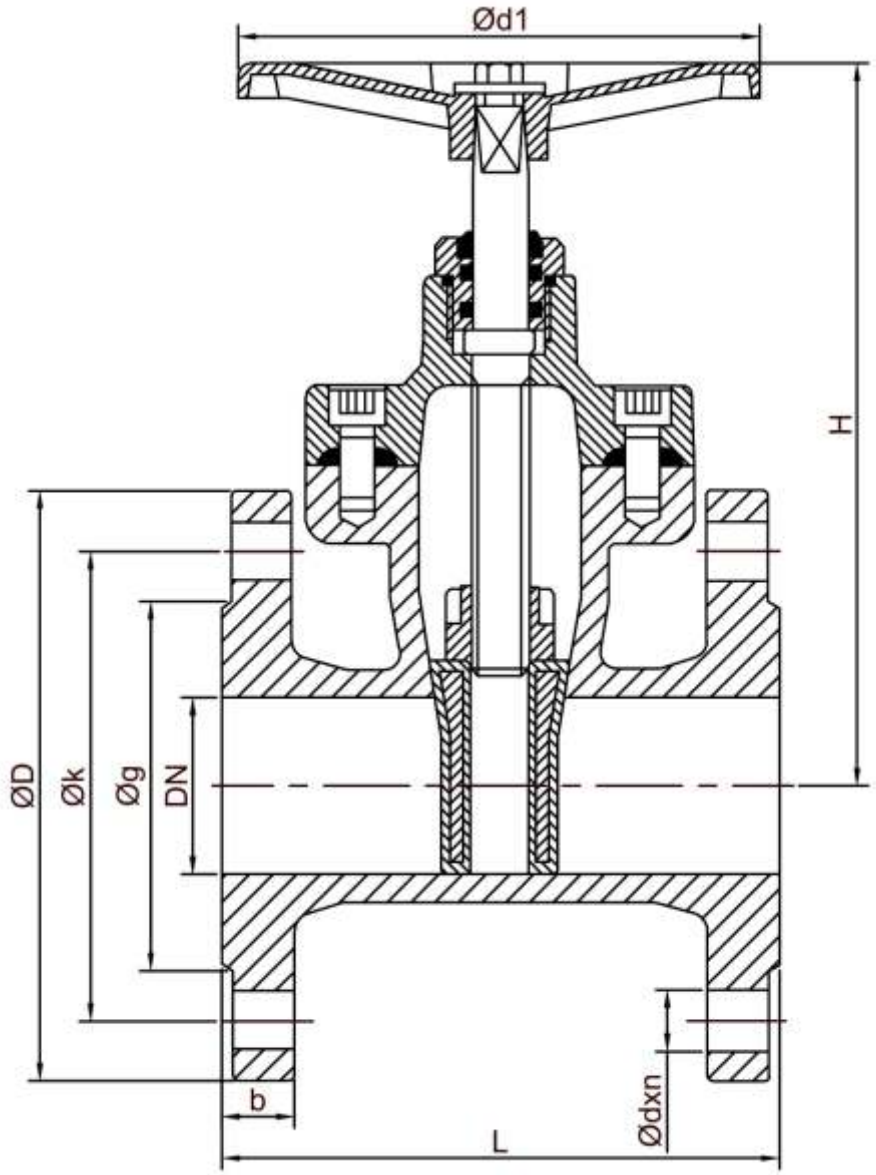

Connection Diameter		Dimensions								Nominal Pressure
DN	Inch	L	H	Ød1	ØD	Øk	Øg	b	Ødxn	PN
40	1 1/2"	140	170	160	150	110	84	18	Ø19x4	16
50	2"	150	180	160	165	125	99	20	Ø19x4	16
65	2 1/2"	170	230	160	185	145	118	20	Ø19x4	16
80	3"	180	245	160	200	160	132	22	Ø19x8	16
100	4"	190	265	200	220	180	156	24	Ø19x8	16
125	5"	200	355	250	250	210	184	26	Ø19x8	16
150	6"	210	400	250	285	240	211	26	Ø23x8	16
200	8"	230	490	315	340	295	266	30	Ø23x12	16
250	10"	250	615	315	405	355	319	32	Ø28x12	16
300	12"	270	700	315	460	410	370	32	Ø28x12	16
350	14"	290	835	400	520	470	429	36	Ø28x16	16
400	16"	310	910	400	580	525	480	38	Ø31x16	16
450	18"	330	1000	400	640	585	548	40	Ø31x20	16
500	20"	350	1135	500	715	650	609	42	Ø34x20	16
600	24"	390	1300	500	840	770	720	48	Ø37x20	16

Metal Seated Gate Valves are operated by turning the control shaft multiple times in a perpendicular position to the flow direction of the iron stem.

Areas of application;

-Hot and cold water
-Fluids that do not show acidic or alkaline properties.

Flange Diameter ;

DN40-DN600

Nominal Pressure ;

PN16

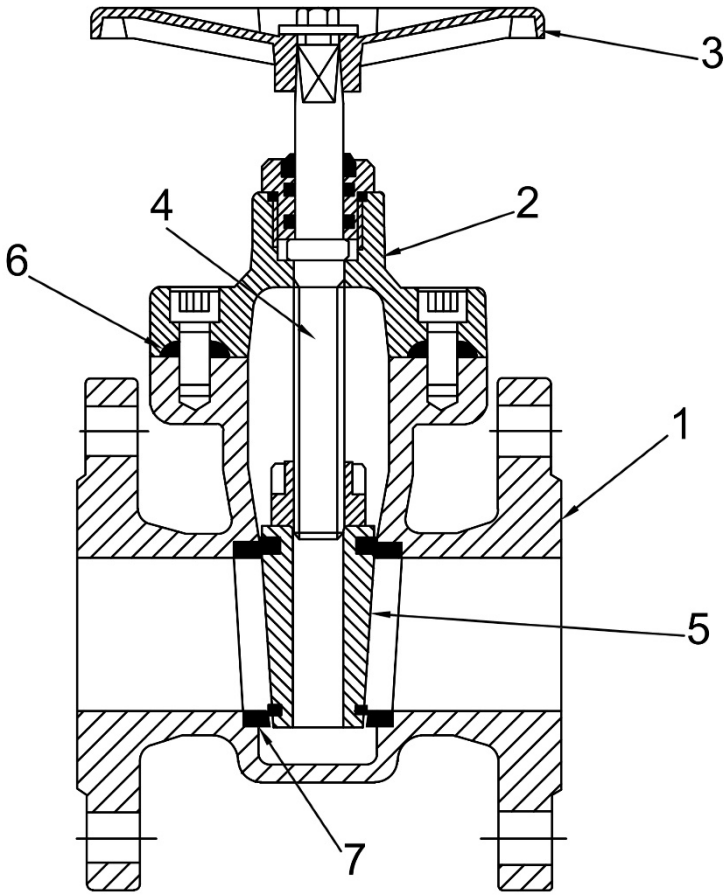

Standart Materials

1	Housing	GG 25
2	Cover	GG 25
3	Flywheel	GG 20
4	Shaft	Stainless steel
5	Stem	GG 25
6	Gasket	NBR / EPDM
7	Seats	Brass, stainless steel, bronze

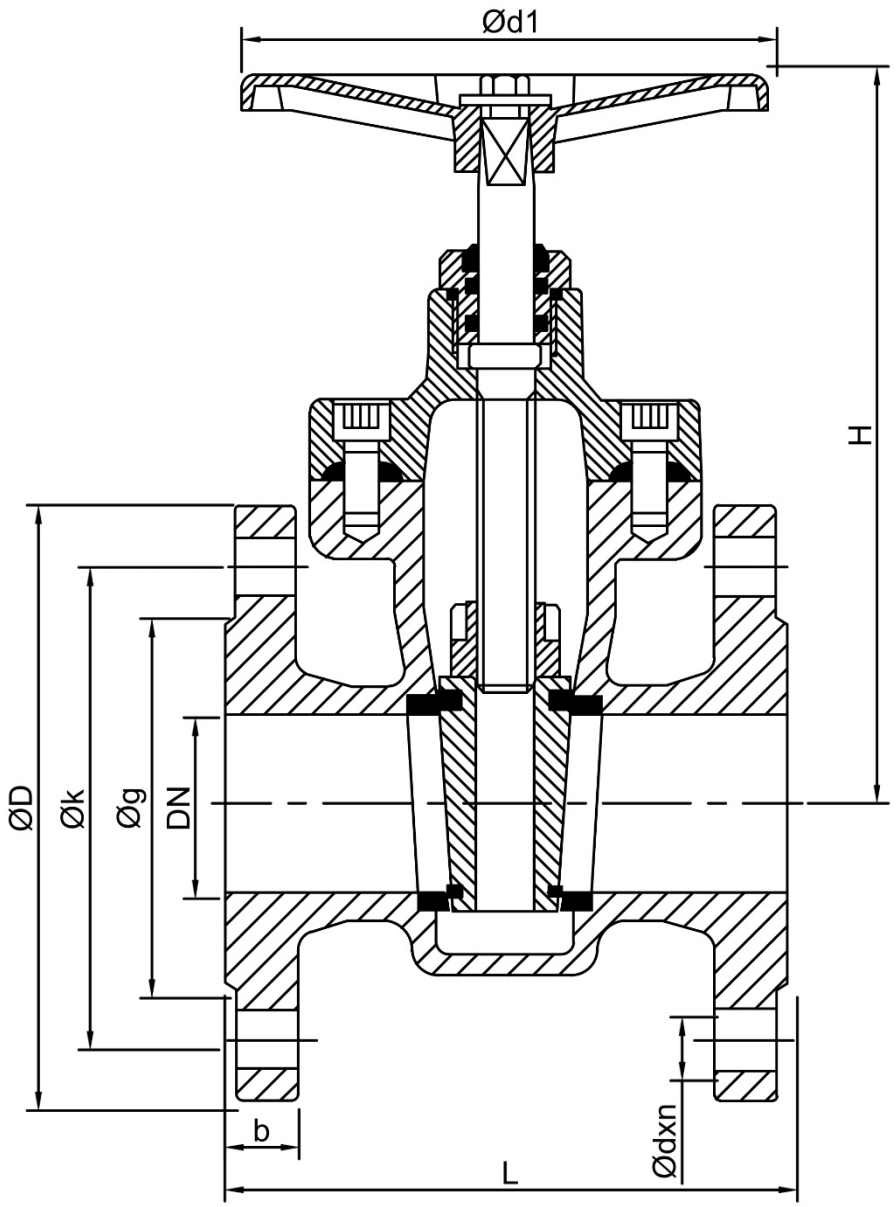

Connection Diameter		Dimensions								Nominal Pressure
DN	Inch	L	H	Ød1	ØD	Øk	Øg	b	Ødxn	PN
40	1 1/2"	140	170	160	150	110	84	18	Ø19x4	16
50	2"	150	180	160	165	125	99	20	Ø19x4	16
65	2 1/2"	170	230	160	185	145	118	20	Ø19x4	16
80	3"	180	245	160	200	160	132	22	Ø19x8	16
100	4"	190	265	200	220	180	156	24	Ø19x8	16
125	5"	200	355	250	250	210	184	26	Ø19x8	16
150	6"	210	400	250	285	240	211	26	Ø23x8	16
200	8"	230	490	315	340	295	266	30	Ø23x12	16
250	10"	250	615	315	405	355	319	32	Ø28x12	16
300	12"	270	700	315	460	410	370	32	Ø28x12	16
350	14"	290	835	400	520	470	429	36	Ø28x16	16
400	16"	310	910	400	580	525	480	38	Ø31x16	16
450	18"	330	1000	400	640	585	548	40	Ø31x20	16
500	20"	350	1135	500	715	650	609	42	Ø34x20	16
600	24"	390	1300	500	840	770	720	48	Ø37x20	16

Flanged Type Globe Valve

CORVALVE

Globe Valve, the flow cross-section in the body of the slide, which is designed at an angle perpendicular to the direction of flow of employees are working with opening and closing valves principle. When the valve is brought to the full tour of the open position is achieved in full flow by opening the entire flow cross-section. The pressure loss in this valve is quite low.

Scope of application;

-HVAC applications,
-Underground lines,
-Irrigation lines,
-Line breakpoints,
-Distribution and collection manifolds and so on.

Connection Diameter ;

DN15-DN200

Nominal Pressure ;

PN16

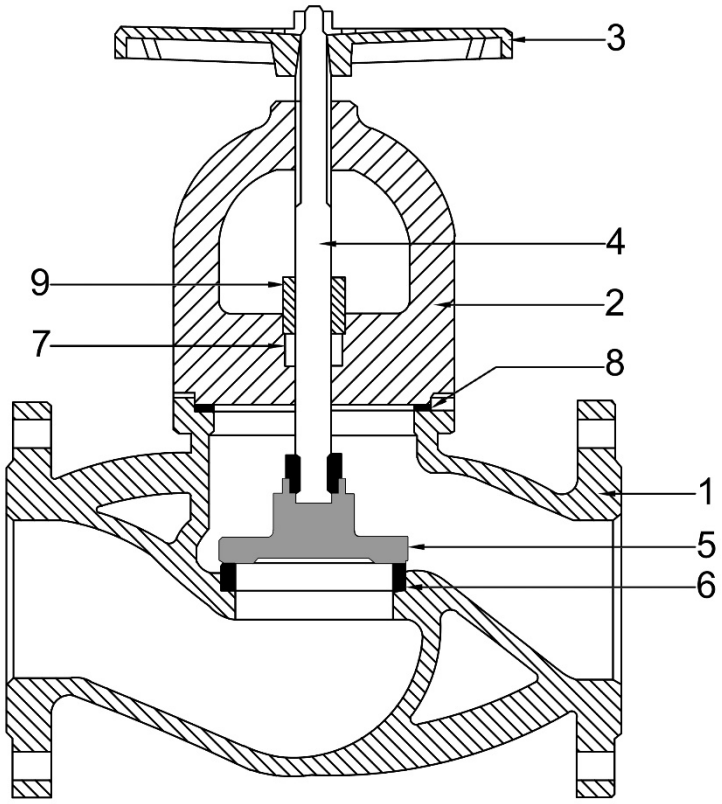

Standart Materials

1	Body	GG 25
2	Cover	GG 25
3	Flywheel	GG 25
4	Shaft	AISI 420 (Stainless steel)
5	Clack	AISI 420 (Stainless steel)
6	Protected	AISI 304 (Stainless steel)
7	Packing	Graphite
8	Gasket	Klingerit
9	The gland	Brass forged

Flanged Type Globe Valve

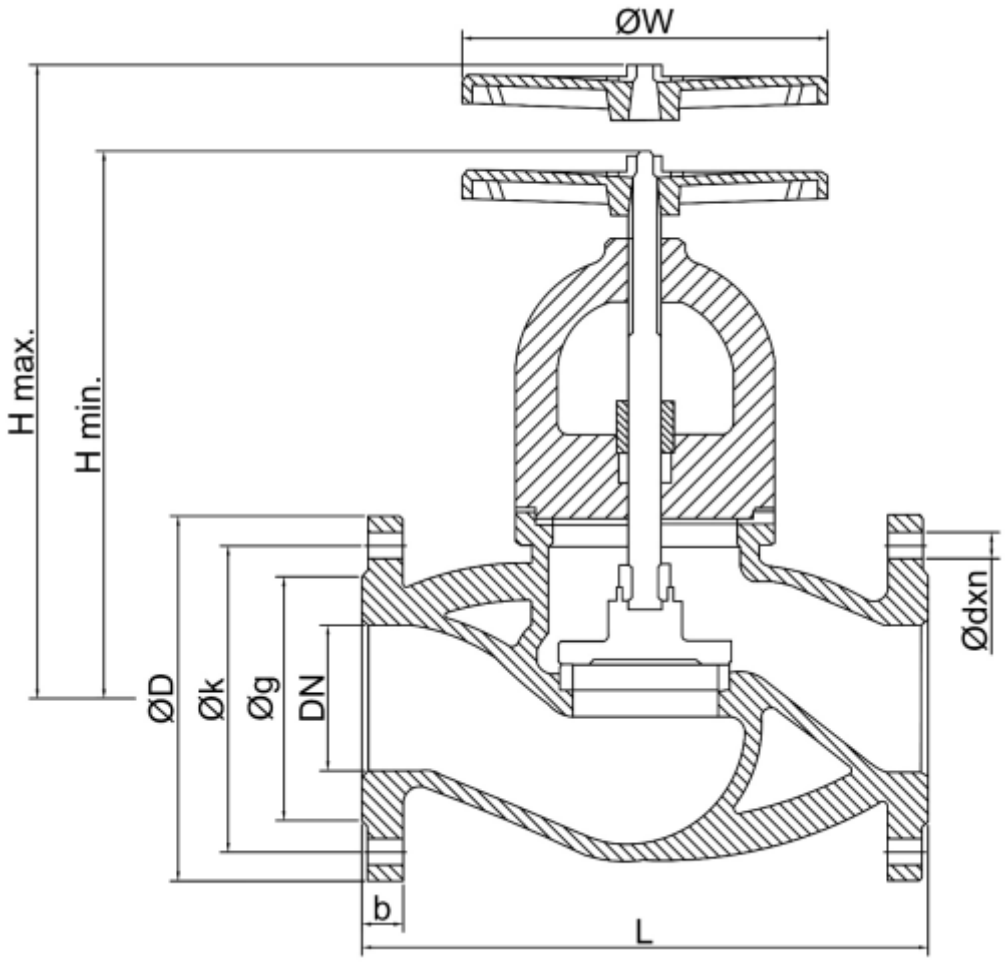

Connection Diameter		Dimensions									Nominal Pressure
DN	Inch	L	H min.	H max.	ØW	ØD	Øk	Øg	b	Ødxn	PN
15	1/2"	130	185	200	125	95	65	46	14	ø14x4	16
20	3/4"	150	190	200	125	105	75	56	16	Ø14x4	16
25	1"	160	215	230	125	115	85	65	16	ø14x4	16
32	1 1/4"	180	220	240	125	140	100	76	18	Ø19x4	16
40	1 1/2"	200	235	275	160	150	110	84	18	ø19x4	16
50	2"	230	245	310	160	165	125	99	20	Ø19x4	16
65	2 1/2"	290	265	310	200	185	145	118	20	ø19x4	16
80	3"	310	290	345	200	200	160	132	22	Ø19x8	16
100	4"	350	310	395	250	220	180	156	24	ø19x8	16
125	5"	400	365	455	315	250	210	184	26	Ø19x8	16
150	6"	480	425	535	315	285	240	211	26	ø23x8	16
200	8"	600	570	680	400	340	295	266	30	Ø23x12	16

Metal Bellows Globe Valve

CORVALVE

Metal Bellows Globe Valve, the flow direction perpendicular to the angle designed exile employees are working on the principle of power off valves in the flow cross-section of the body. When the valve is brought to the full round open position, the entire flow cross-section open and provide full flow. Pressure losses are very low valve type.

Scope of application;

-HVAC applications,
-Underground lines,
-Irrigation lines,
-Line breakpoints,
-Distribution and collection manifolds and so on.

Connection Diameter ;

DN15-DN200

Nominal Pressure ;

PN16

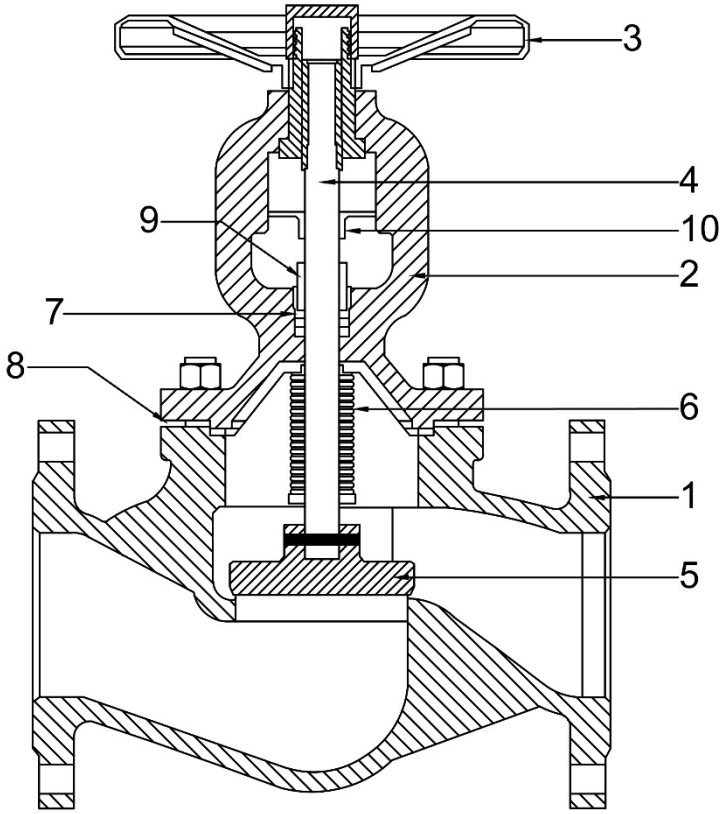

Standart Materials

1	Body	GG 25
2	Cover	GG 25
3	Flywheel	GG 25
4	Shaft	AISI 420 (Stainless steel)
5	Clack	AISI 420 (Stainless steel)
6	Bellow	AISI 304 (Stainless steel)
7	Packing	Graphite
8	Gasket	Klingerit
9	The gland	Brass forged
10	Level indicator	Carbon steel

Metal Bellows Globe Valve

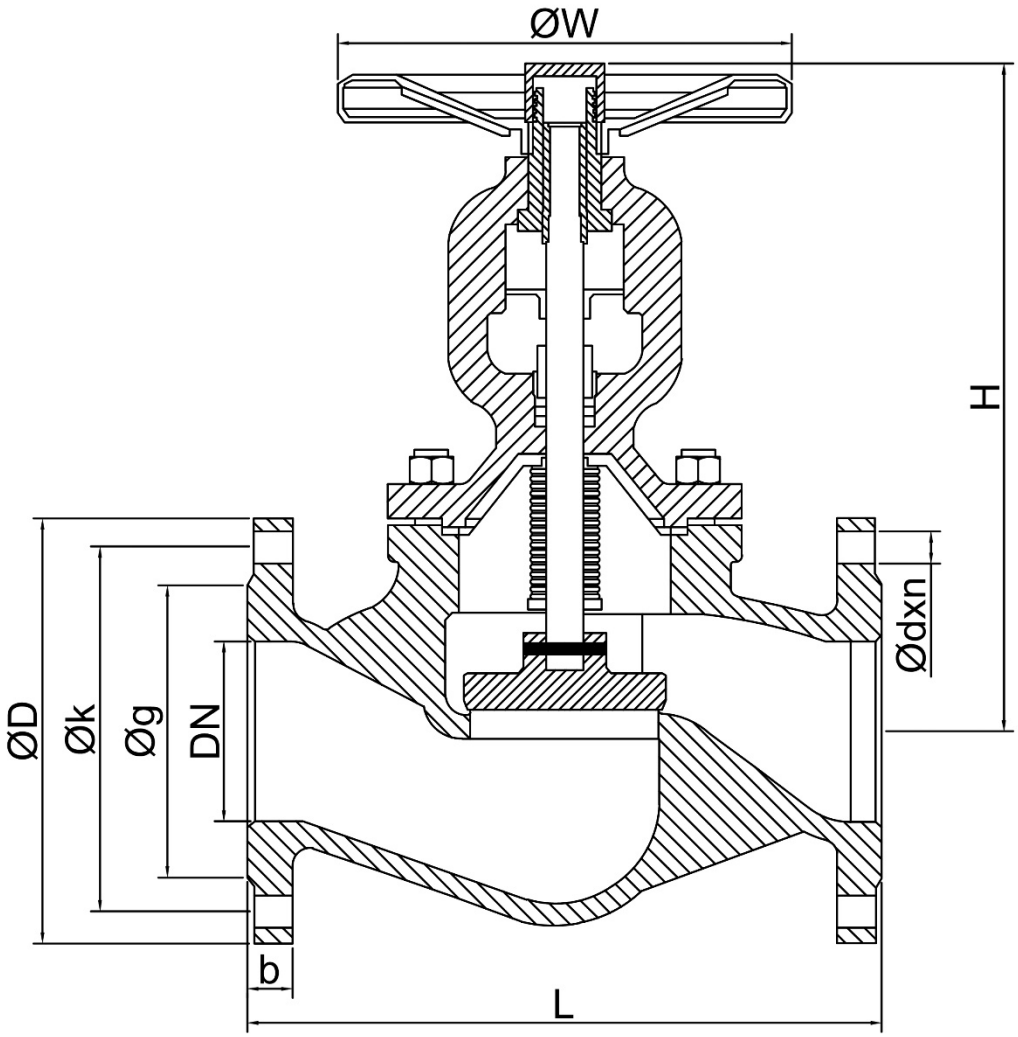

Connection Diameter		Dimensions								Nominal Pressure
DN	Inch	L	H	ØW	ØD	Øk	Øg	b	Ødxn	PN
15	1/2"	130	190	140	95	65	46	14	Ø14x4	16
20	3/4"	150	190	140	105	75	56	16	Ø14x4	16
25	1"	160	195	160	115	85	65	16	Ø14x4	16
32	1 1/4"	180	210	180	140	100	76	18	Ø19x4	16
40	1 1/2"	200	220	180	150	110	84	18	Ø19x4	16
50	2"	230	230	200	165	125	99	20	Ø19x4	16
65	2 1/2"	290	255	200	185	145	118	20	Ø19x4	16
80	3"	310	270	250	200	160	132	22	Ø19x8	16
100	4"	350	360	280	220	180	156	24	Ø19x8	16
125	5"	400	380	300	250	210	184	26	Ø19x8	16
150	6"	480	415	350	285	240	211	26	Ø23x8	16
200	8"	600	530	400	340	295	266	30	Ø23x12	16

A Single Air Valve sometimes referred to as a "small orifice" valve, will continuously release accumulated air during system operation. As air from the pipeline enters the valve, it displaces the water, allowing the float to drop. The air is then released into the atmosphere through a small orifice. As the air is vented it is replaced. An added benefit of an Air/Vacuum Valve is its ability to provide pipeline vacuum protection. If a negative pressure develops, the air release valve will open, admitting air into the line, reducing the potential for surges related to column separation and possible pipeline collapse.

FLANGE CONNECTION DIMENSIONS PN10, PN16								
DN Nominal Diameter (mm)	D (mm)	k (mm)	F (mm)	f (mm)	b (mm)	Hole Diameter	H (mm)	WEIGHT (Kg)
Ø50(PN10-16)	165	125	102	3	18	Ø18x4	227	8
Ø65(PN10-16)	185	145	122	3	18	Ø18x4	229	9
Ø80(PN10-16)	200	160	138	3	20	Ø18x8	236	13
Ø100(PN10-16)	220	180	158	3	20	Ø18x8	236	15
Ø125(PN10-16)	250	210	188	3	22	Ø18x8	372	26
Ø150(PN10-16)	285	240	212	3	22	Ø22x8	372	27
Ø200(PN10)	340	295	268	3	24	Ø22x8	372	30
Ø200(PN16)	340	295	268	3	24	Ø22x12	372	30

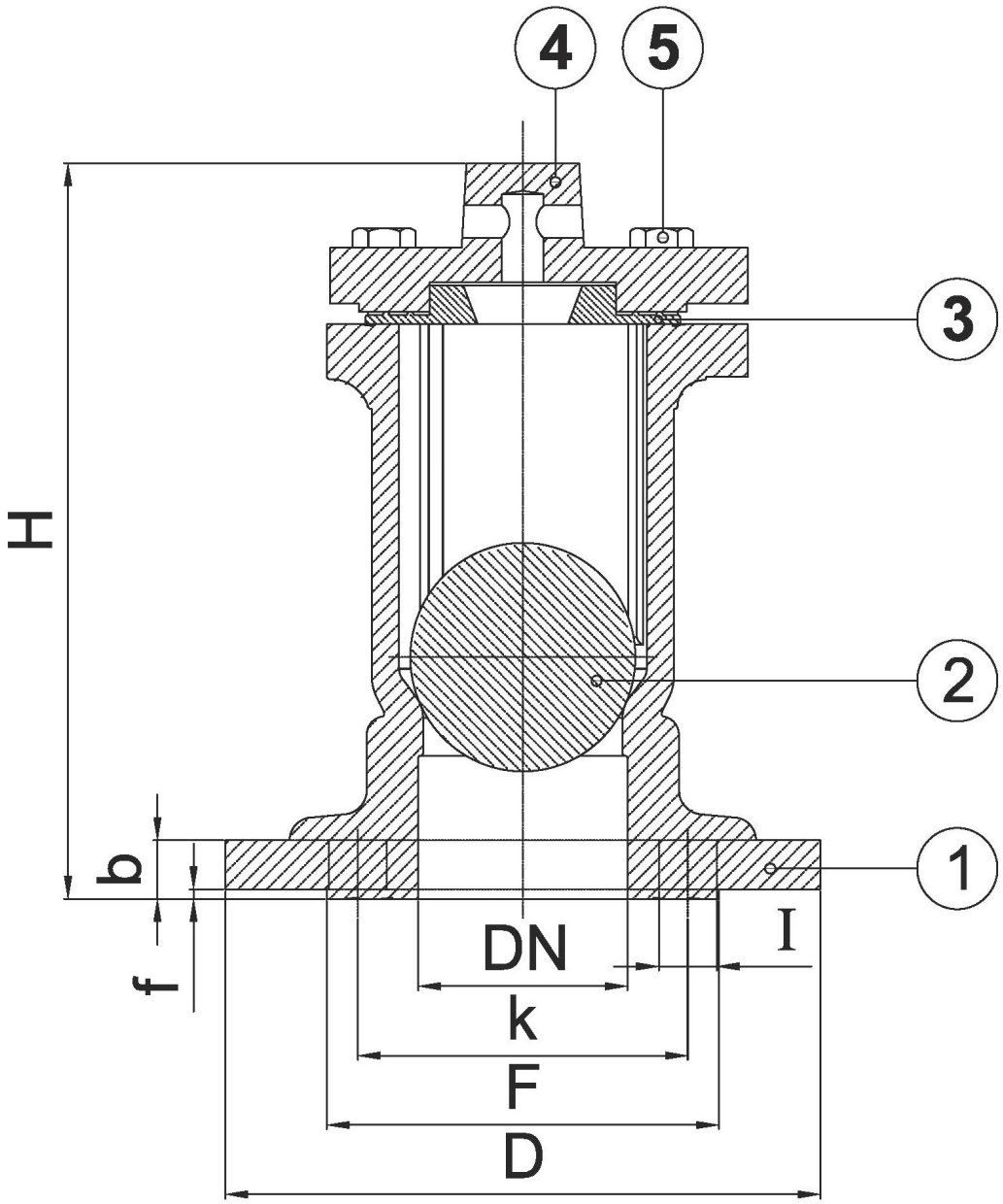

NO	NAME	MATERIAL
1	Body	Cast Iron GGG25 EN JL 1040
2	Ball	POLYTHENE
3	Bonnet Gasket	EPDM
4	Bonnet	Cast Iron GGG25 EN JL 1040
5	Bonnet Bolts	Galvanized steel epoxy coated

Double Air Valves ensure that air in the pipe will be automatically evacuated when pipeline is filled with water. Air is evacuated quickly so that water will not make back pressure and affect flow negatively. When water in pipeline is drained, air enters into pipe quickly in such a way that it will not create vacuum. It is proposed that double air valve will be used for maximum efficiency. Generally it is used in pump downstream automatic irrigation controller upstream and in elevation differentials emerged by referring water source.

DIMENSION TABLE FOR DOUBLE ORIFICE AIR RELEASE VALVE									
DN Nominal Diameter (mm)	D (mm)	k (mm)	F (mm)	f (mm)	b (mm)	Hole Diameter	L (mm)	H (mm)	WEIGHT (Kg)
Ø50(PN10-16)	165	125	102	3	18	Ø18x4	410	275	27
Ø68(PN10-16)	185	145	122	3	18	Ø18x4	410	275	28
Ø80(PN10-16)	200	160	138	3	20	Ø18x8	415	280	29
Ø100(PN10-16)	220	180	158	3	20	Ø18x8	415	280	31
Ø125(PN10-16)	250	210	188	3	22	Ø18x8	415	280	32
Ø150(PN10-16)	285	240	212	3	22	Ø18x8	635	400	79
Ø200(PN10)	340	295	268	3	24	Ø18x8	635	400	87
Ø200(PN16)	340	295	268	3	24	Ø18x12	635	400	87
Ø250(PN10)	395	350	320	3	26	Ø18x12	655	370	92
Ø250(PN16)	405	355	320	3	26	Ø18x12	655	370	93

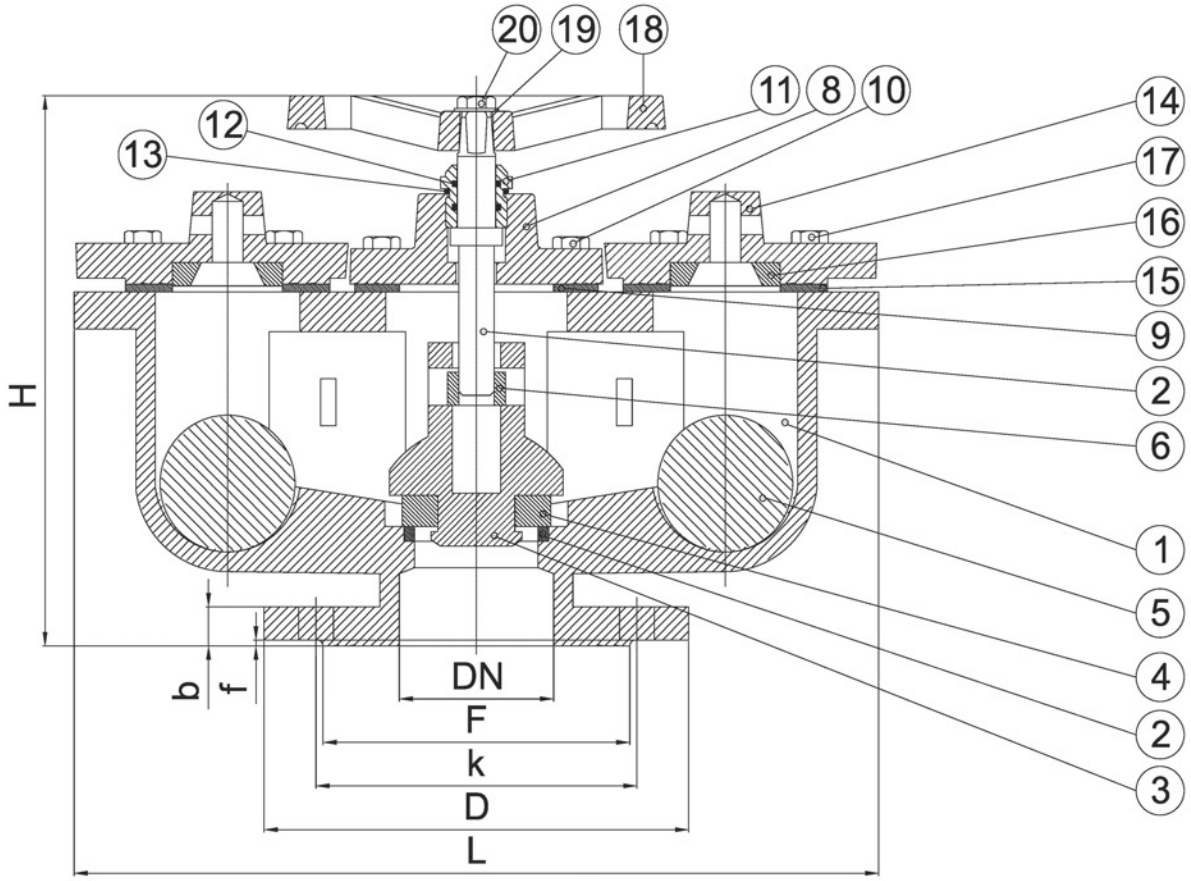

NO	NAME	MATERIAL
1	Body	GG25
2	Horoscope	MS58
3	Slide	GG25
4	Slide Gasket	EPDM
5	Ball	POLYETHYLENE
6	Moving Nut	MS58
7	Shaft	X20CR13
8	Middle Cover	GG25
9	Middle Cover Gasket	EPDM
10	Middle Cover Bolt	6,8 GALVANIZED
11	Unions	GGG40
12	Unions Orings	EPDM
13	Cover O-ring	EPDM
14	Side Cover	GG25
15	Side Cover Gasket	EPDM
16	Side Cover Seal Center	EPDM
17	Side Cover Bolt	6,8 GALVANIZED
18	Handwheel	GG25
19	Handwheel Washer	Metal
20	Handwheel Bolt	6,8 GALVANIZED

Non-Slam Dynamic ARV to be used for the purpose of vacuuming air into the pipe during emptying the pipeline due to maintenance or failure circumstances. In addition, to release small air particules that may occur time to time during operation.
Non-Slam Dynamic ARV is installed to the pipe with a flanged connection. One of the most important feature of Non-Slam Dynamic ARV is that air outlet diameter has the same size with inlet diameter.

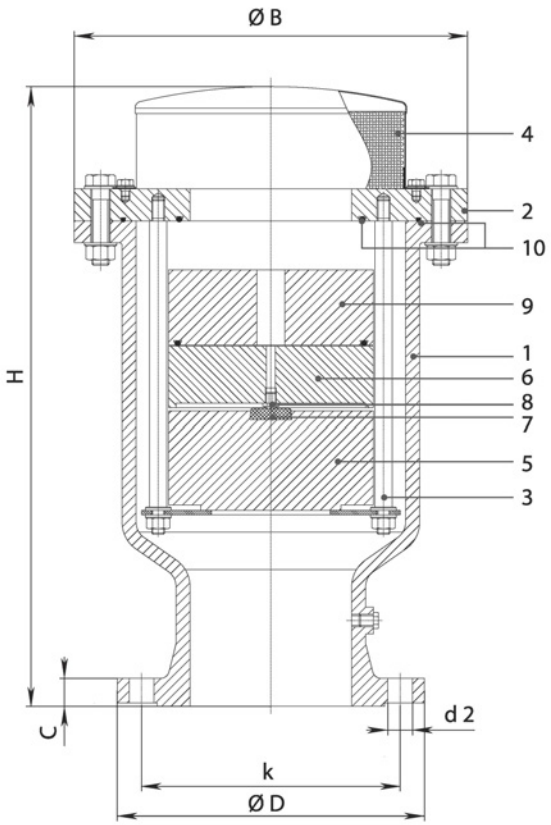

NO	NAME
1	Body
2	Cover
3	Floater Guide
4	Top cover
5	Floater
6	Floater
7	Small Orifice Seal
8	Small Orifice
9	Floater
10	O-ring

NO	MATERIAL
1	Ductile Iron
2	Stainless steel
3	Stainless steel
4	Stainless steel
5	HDPE
6	HDPE
7	EPDM
8	Stainless steel
9	HDPE
10	EPDM

Y-Type Strainer

CORVALVE

Y-Type Silt Trap removes the particles in a fluid when the fluid is passed through a chamber equipped with a filter.

Application areas;

-Hot, warm and cold water,
-Steam,
-Chemical fluids,
-Gas systems,
-Fluids that do not show acidic or alkaline properties
-Compressed air,
-Industrial applications.

Flange Diameter ;

DN25-DN150

Nominal Pressure ;

PN16

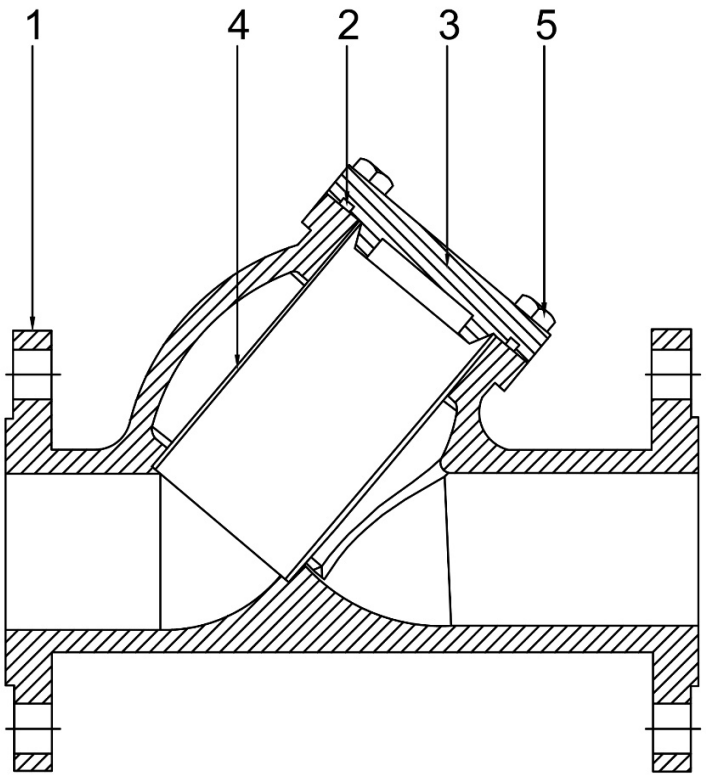

Standart Materials

1	Housing	GG 25
2	O-ring	Viton
3	Cover	GG 25
4	Filter	Cr-Ni
5	Bolt	DIN 933

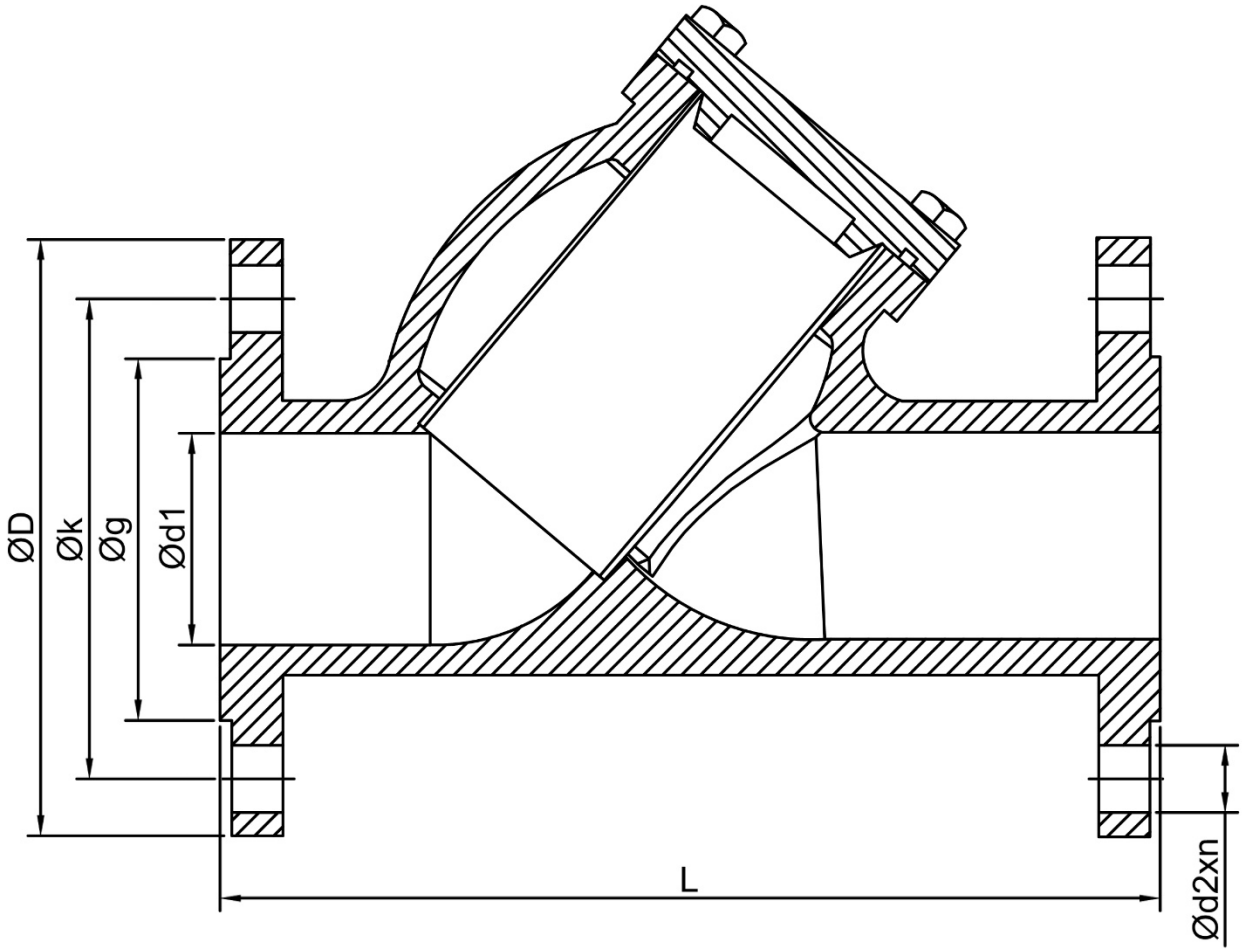

Flange Diameter		Dimensions					Nominal Pressure
DN	Inch	L	ØD	Øk	Øg	Ød2xn	PN
25	1"	160	115	85	65	Ø14x4	16
32	1 1/4"	180	140	100	76	Ø19x4	16
40	1 1/2"	200	150	110	84	Ø19x4	16
50	2"	230	165	125	99	Ø19x4	16
65	2 1/2"	290	185	145	118	Ø19x4	16
80	3"	310	200	160	132	Ø19x8	16
100	4"	350	220	180	156	Ø19x8	16
125	5"	400	250	210	184	Ø19x8	16
150	6"	480	285	240	211	Ø23x8	16

Dismantling Joints play a decisive role in the design and layout of pipelines and valves. They are an essential aid during the installation and removal of pipe sections and valves. Without a dismantling joint offering longitudinal adjustment, it is almost impossible to insert a valve exactly into a pipe section. Thanks to this adjustability of the dismantling joint, the valve can be fitted next to the dismantling joint, and the dismantling joint can be to set to the exact length required prior to being securely connected to flanges.

Areas of application;

- Potable Water
- Distribution Lines
- Industrial Applications
- Chamber Installation
- Water Treatment Plants
- Pumping Stations
- Seawater Applications
- Industry

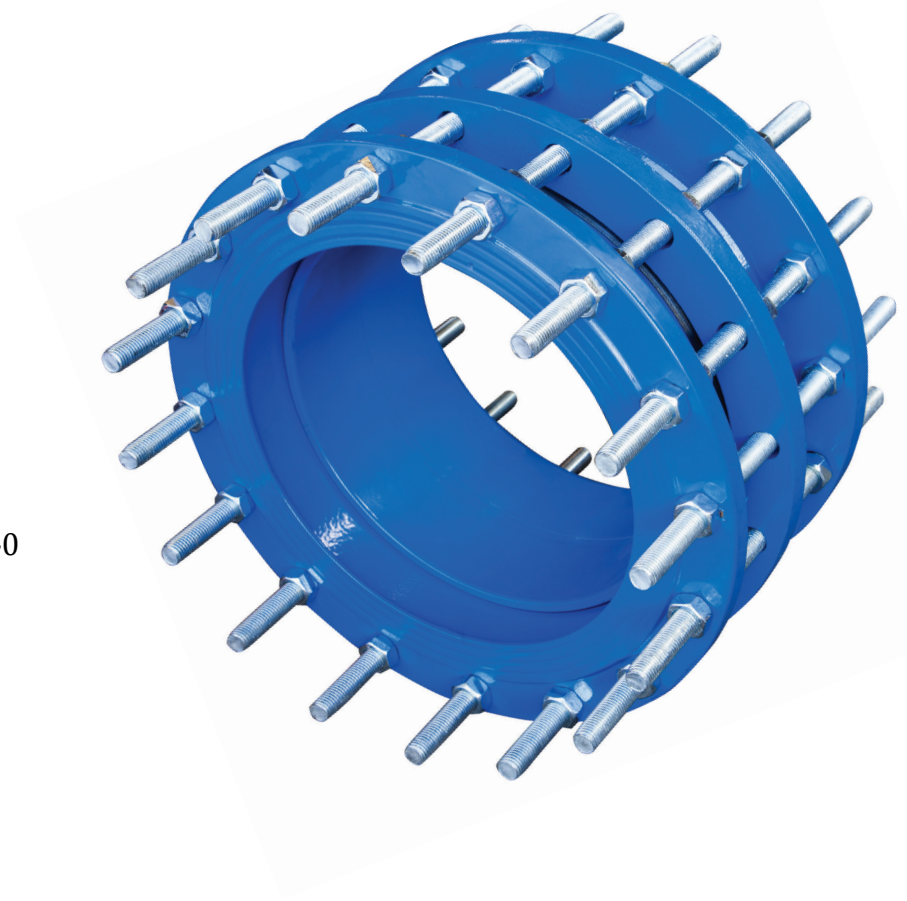

Sizes ;

- DN50 to DN2200

Nominal Pressure ;

- PN 10 - PN 16 - PN 25 - PN 40

Flange Connection ;

- EN 1092 - 2

Casting Standard ;

- EN 1563:2011(EN)

Tests ;

- EN 1074 , EN 12266

Dismantling Joint Materials		
Item No	**Track Name**	**Material Type**
1	Long item	St.37 / GGG 40-50 Epoxy Cracking
2	Short item	St.37 / GGG 40-50 Epoxy Cracking
3	Intermediate Flange	St.37 / GGG 40-50 Epoxy Cracking
4	Stud And Bolt	8.8 ELEKTROGALVANİZ Cracking / AISI 304-316
5	Nut	8.8 ELEKTROGALVANİZ Cracking / AISI 304-316
6	O-RING	EPDM - Nitrile
7	Coating	Epoxy RAL 5005 250 - 300 Mikron

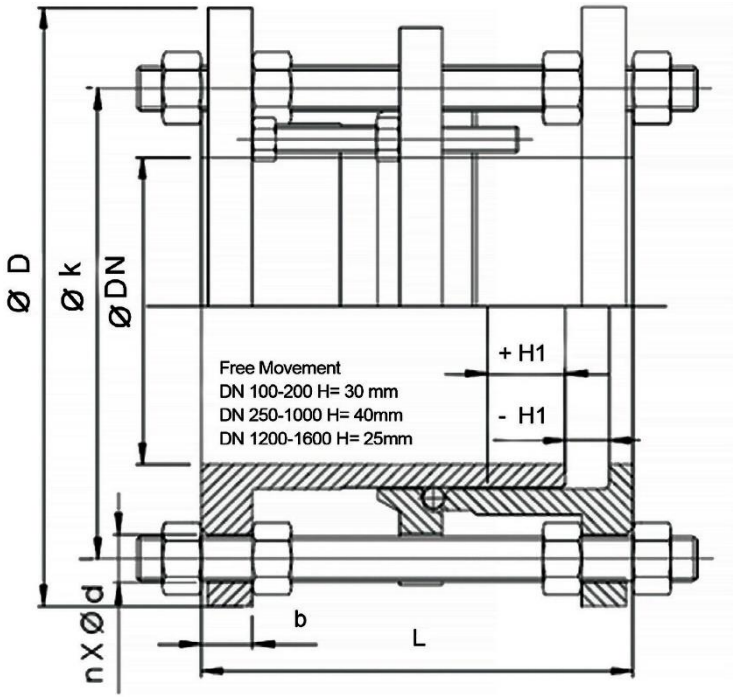

Size	Dimensions							Weights	
	PN 10			PN 16			H	PN 10	PN 16
DN	D	k	dxn	D	k	d2xn	H	Kg	Kg
50	165	125	19x4	165	125	19x4	40	8	8
65	185	145	19x4	185	145	19x4	40	9	9
80	200	160	19x8	200	160	19x8	40	16	16
100	220	180	19x8	220	180	19x8	40	21	21
125	250	210	19x8	250	210	19x8	40	26	26
150	285	240	23x8	285	240	23x8	40	35	35
200	340	295	23x8	340	295	23x12	40	46	50
250	400	350	23x12	405	355	28x12	40	70	80
300	455	400	23x12	460	410	28x12	40	90	99
350	505	460	23x16	520	470	28x16	40	105	140
400	565	515	28x16	580	525	31x16	40	135	165
450	615	565	28x20	640	585	31x20	40	145	190
500	670	620	28x20	715	650	34x20	40	155	210
600	780	725	31x20	840	770	37x20	40	215	300
700	895	840	31x24	910	840	37x24	40	265	340
800	1015	950	34x24	1025	950	41x24	40	310	400
900	1115	1050	34x28	1125	1050	41x28	40	370	450
1000	1230	1160	37x28	1255	1170	44x28	40	450	500
1100	1340	1270	37x32	1355	1270	44x32	40	600	700
1200	1455	1380	41x32	1485	1390	50x32	40	730	840
1300	1585	1490	42x32	1585	1490	50x32	40	810	950
1400	1675	1590	44x36	1685	1590	50x36	40	890	1.020
1500	1785	1700	44x36	1820	1710	57x36	40	1.050	1.250
1600	1915	1820	50x40	1930	1820	57x40	40	1.680	2.100
1800	2.115	2020	50x44	2.130	2020	57x44	40	2100	2800
2000	2.325	2230	50x48	2.345	2230	62x48	40	2400	3050
2200	2.550	2440	56x56	2.555	2440	62x52	40	3000	3530

Electric Actuators

Quarter-Turn Actuators are control members used for automation purposes and angular motion transmitted by electric motor is controlled with gears and transmitted to the valve control stem.

Application areas;
-Ball valves,
-Butterfly valves,
-Lug valves.

Power Supply ;
220 V

Power :
10 W

Nominal Current ;
0.16 A

Output Torque ;
20 Nm/50Nm

90 ° Rotating Time ;
10 s/30 s

Opreational Angle ;
0 ° / 360 °

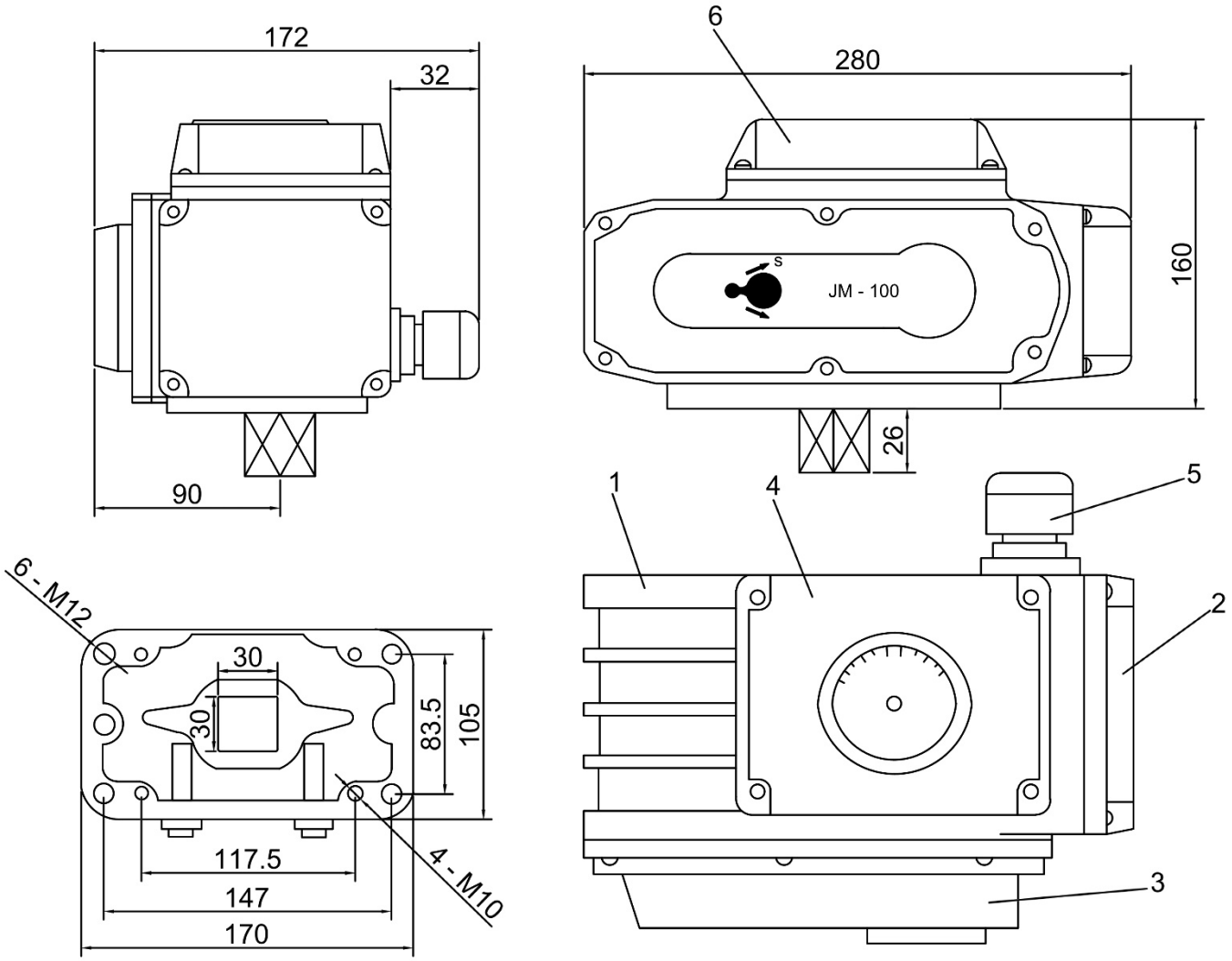

Standart Materials

1	Housing	Aluminium alloy
2	Cable Cover	Aluminium alloy
3	Gear Cover	Aluminium alloy
4	Mechanics Block	Aluminium alloy
5	Water-proof connector	Plastic
6	Top Cover	Aluminium alloy

JM -100

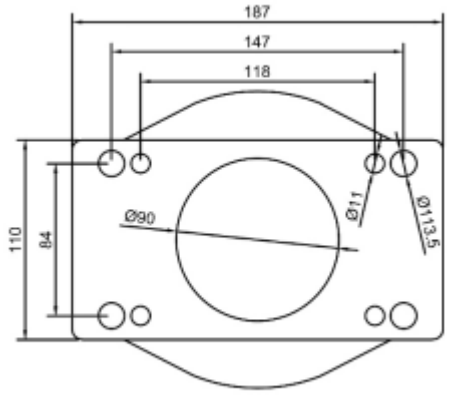
187
147
118
110
84
Ø90
Ø11
Ø113.5

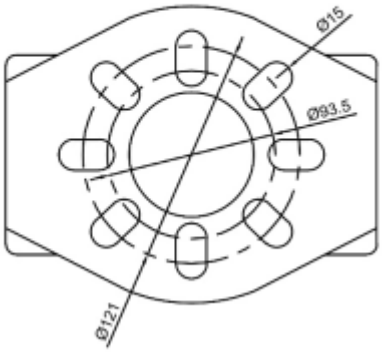
Ø15
Ø93.5
Ø121

83

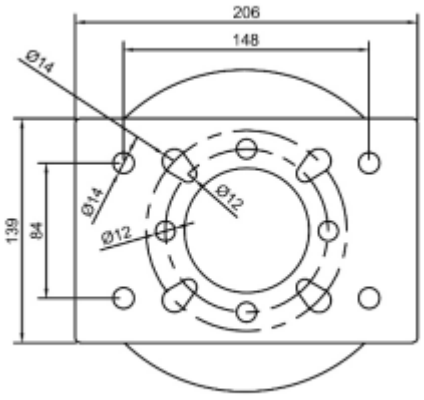
206
148
Ø14
Ø14
Ø12
Ø12
139
84

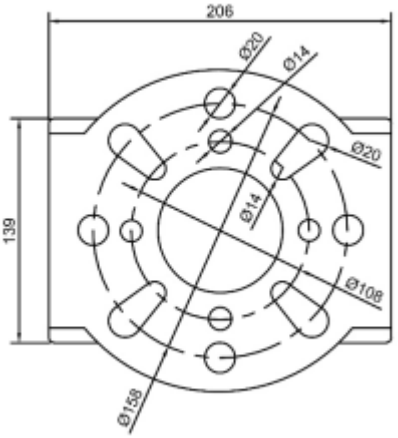
206
Ø20
Ø14
Ø20
Ø14
Ø108
139
Ø158

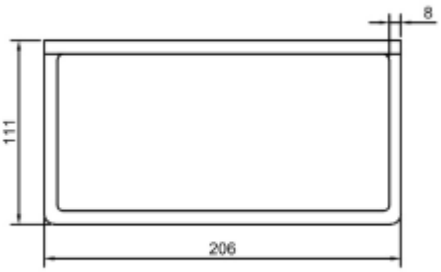
8
111
206

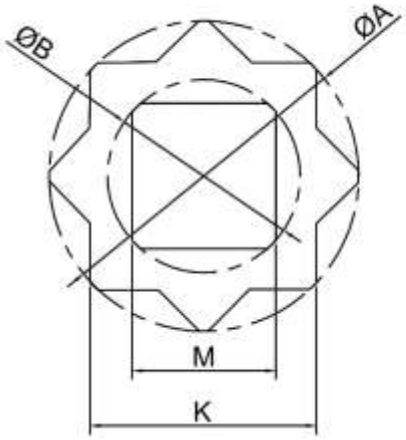

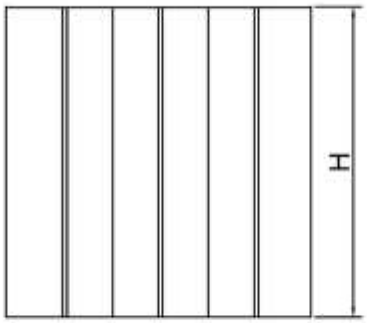

Type	Dimensions				
	K -0.03 -0.05	ØA -0.1 -0.2	M +0.14 +0.06	ØB	H
11M9	11	15	9	12	12
14M9	14	19	9	12	16
14M11	14	19	11	14.8	16
17M11	17	23	11	14.8	19
17M14	17	23	14	19	19
19M14	19	26	14	19	21
19M17	19	26	17	23	21
22M14	22	30	14	19	24
22M17	22	30	17	23	24
22M19	22	30	19	26	24
27M17	27	37	17	23	29
27M19	27	37	19	26	29
27M22	27	37	22	30.3	29
36M19	36	49	19	26	38
36M22	36	49	22	30.3	38
36M27	36	49	27	37.3	38
46M36	46	60	36	60	48

Model No	Torque (Nm)	Stroke (s)	Opening-Closing Type	Ball Valve	Ball Valve	Butterfly Valve (Hard Gasket)	Butterfly Valve (Soft Gasket)
05	50	12/25s	(AC24V.AC110.AC220V. AC380V.DC24V.) For Models 5/10/15/25 DC power supply is used.	DN15-DN25	DN15-DN40	DN50	DN50-DN65
10	100	15/30s		DN32-DN40	DN50-DN65	DN65-DN80	DN80-DN125
15	150	15/30s		DN40-DN50	DN65	DN100-DN125	DN125-DN150
25	250	15/30s		DN65-DN80	DN80-DN100	DN125-DN150	DN150-DN200
50	500	15/30s		DN80-DN100	DN100-DN125	DN200-DN250	DN250-DN300
100	1000	50/100s		DN125	DN150	DN250-DN300	DN300-DN350
200	2000	50/100s		DN150-DN200	DN200-DN250	DN350-DN400	DN400-DN500
05	50	12/25s	Modulation Type (AC24V.AC110. AC220V. AC380V.) Input 4 ~ 20mA Output 4 ~ 20mA	DN15-DN25	DN15-DN40	DN50	DN50-DN65
10	100	15/30s		DN32-DN40	DN50-DN65	DN65-DN80	DN80-DN125
15	150	15/30s		DN40-DN50	DN65	DN100-DN125	DN125-DN150
25	250	15/30s		DN65-DN80	DN80-DN100	DN125-DN150	DN150-DN200
50	500	15/30s		DN80-DN100	DN100-DN125	DN200-DN250	DN250-DN300
100	1000	50/100s		DN125	DN150	DN250-DN300	DN300-DN350
200	2000	50/100s		DN150-DN200	DN200-DN250	DN350-DN400	DN400-DN500

Pneumatic Actuators

Double Acting Pneumatic Actuators is a reliable, low-maintenance member for fast or slow opening-closing or proportional operating with the systems such as ball, butterfly, plug valves and similar systems turning with an angle of 90 degrees.

Application areas;

-Filling systems (box, tin, barrel)
-Machinery lines requiring special turning motion,
-Treatment plants,
-All valves and equipment requiring automatic control .

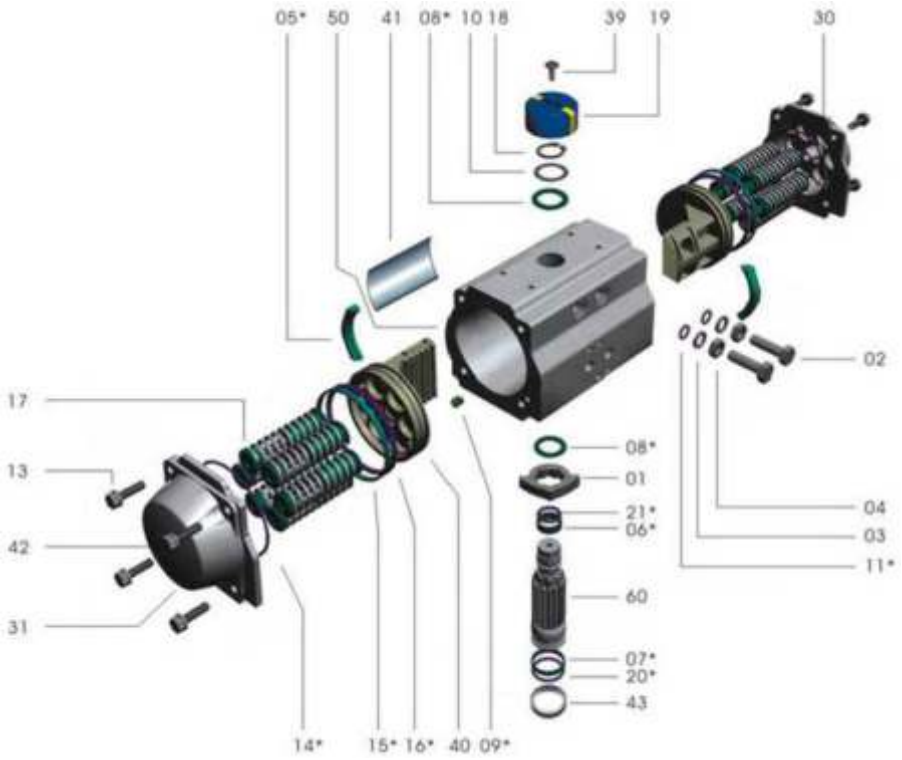

Standard Materials

01	Position sensor (CAM)	Alloy steel
02	Limit adjustor bolt	Stainless steel
03	Washer	Stainless steel
04	Nut	Stainless steel
05*	Guide (Piston)	Delrin
06*	Bushing (Shaft-Upper)	Delrin
07*	O-Ring(Shaft-Lower)	NBR
08*	Inner washer	Delrin
09*	Cap	NBR
10	Metal washer	Stainless steel
11*	O-Ring (Adjustor bolt)	NBR
13	Cover bolt	Stainless steel
14*	O-Ring (Cover)	NBR
15*	Bushing washer (Piston)	Delrin
16*	O-Ring (Piston)	NBR
17	Prestressed springs	Spring steel
18	Retaining ring	Stainless steel
19	Indicator	Plastic
20*	Bushing (Shaft-Lower)	Delrin
21*	O-Ring (Shaft-Upper)	NBR
30	Cover	Aluminium injection
31	Cover	Aluminium injection
39	Indicator bolt	Alloy steel
40	Piston	Aluminium injection
41	Label	Polyester
42	Cover Label	Polyester
43	Tap	Aluminium
50	Housing	Aluminium extrusion
60	Shaft	Alloy steel

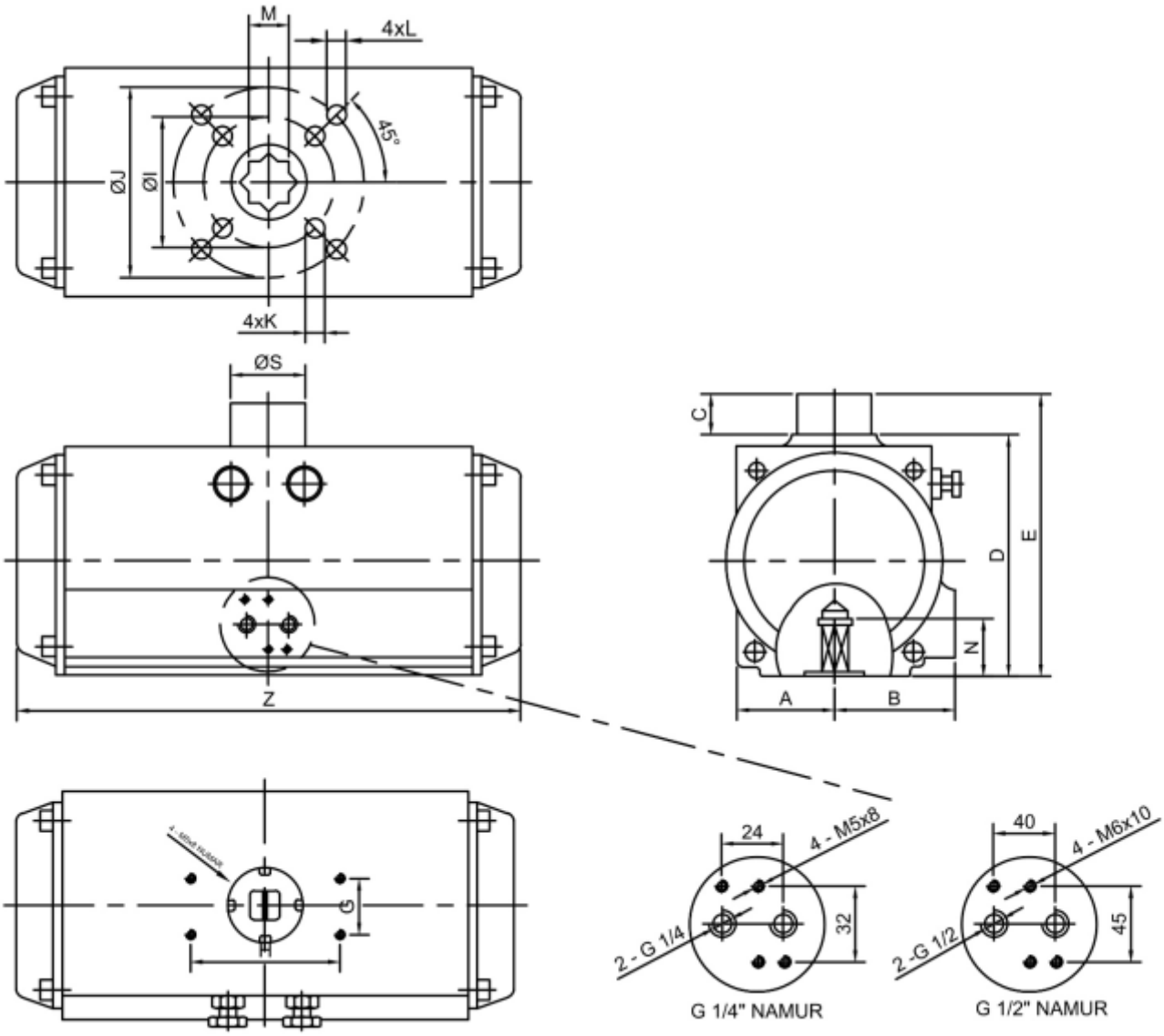

Model		Dimensions															Air Connection
		A	B	C	D	E	G	H	ØI	ØJ	K	L	M	N	Z	ØS	
JAT40DA	DA/SR	40	36	20	45	81	30	80	36	50	M5x8	M6x10	9x9	15	121	34	NAMUR G1/4"
JAT52DA	DA/SR	30	41	20	72	92	30	80	36	50	M5x8	M6x10	11x11	15	145	34	NAMUR G1/4"
JAT63DA	DA/SR	36	46	20	88	109	30	80	50	70	M6x10	M8x12	14x14	15	169	34	NAMUR G1/4"
JAT75DA	DA/SR	42	52	20	100	120	30	80	50	70	M6x10	M8x12	14x14	15	201	34	NAMUR G1/4"
JAT83DA	DA/SR	46	55	20	109	129	30	80	50	70	M6x10	M8x12	14x14	15	209	34	NAMUR G1/4"
JAT92DA	DA/SR	51	57.5	20	117	137	30	80	50	70	M6x10	M8x12	17x17	17	242	41	NAMUR G1/4"
JAT105DA	DA/SR	58	64	20	134	154	30	80	70	102	M8x12	M10x16	22x22	25	275	41	NAMUR G1/4"
JAT125DA	DA/SR	67.5	70	30	157	187	30	80	70	102	M8x12	M10x16	22x22	25	332	41	NAMUR G1/4"
JAT140DA	DA/SR	76	77	30	174	204	30	130	102	125	M10x16	M12x20	27x27	30	385	62	NAMUR G1/4"
JAT160DA	DA/SR	86.5	87.5	30	199	229	30	130	102	125	M10x16	M12x20	27x27	30	450	62	NAMUR G1/4"
JAT190DA	DA/SR	103	103	30	233	263	30	130		140		M12x20	36x36	34	507	62	NAMUR G1/4"
JAT210DA	DA/SR	113	113	30	257	287	30	130		140		M12x20	36x36	34	562	79	NAMUR G1/4"
JAT240DA	DA/SR	129	129	30	293	323	30	130		165		M20x24	36x36	34	646	79	NAMUR G1/4"
JAT270DA	DA/SR	146	146	30	333	363	30	130		165		M20x24	46x46	52	722	79	NAMUR G1/2" NAMUR G1/4"

Actuator air consumption rate (L/ /Stroke)

Model	JAT40DA	JAT52DA	JAT63DA	JAT75DA	JAT83DA	JAT92DA	JAT105DA	JAT125DA	JAT140DA	JAT160DA	JAT190DA	JAT210DA	JAT240DA	JAT270DA
Opening (Lt.)	0.06	0.12	0.21	0.30	0.43	0.64	0.95	1.6	2.5	3.7	5.9	7.5	11.0	17.0
Closing (Lt.)	0.08	0.16	0.23	0.34	0.47	0.73	0.88	1.4	2.2	3.2	5.4	6.8	9.0	14.0

Air consumption varies based on the inlet pressure and it is calculated as provided below.

Consumption (Lt./min.)=Air volume (Opening air volume + Closing air volume)x $\left[\frac{\text{Air feeding (Kpa)} + 101.3\ 101.3}{101.3}\right]$ x Number of Strokes (min.)

Operating Principles and Torque Values of Double-Acting Pneumatoc Actuators

Double acting actuators are actuators controlled with 5/2 or 5/3 way valves where opening and closing is achieved with air.

Counter Clockwise Rotation

Air supplied to Channel A turn the shaft towards counter clockwise direction, thrusts the pistons out, in this case Channel B is open. Air supplied to Channel B turn the shaft towards clockwise direction, retracts the pistons in this case Channel A is open.

Clockwise Rotation

Air supplied to Channel A turn the shaft towards clockwise direction, thrusts the pistons out, in this case Channel B is open.

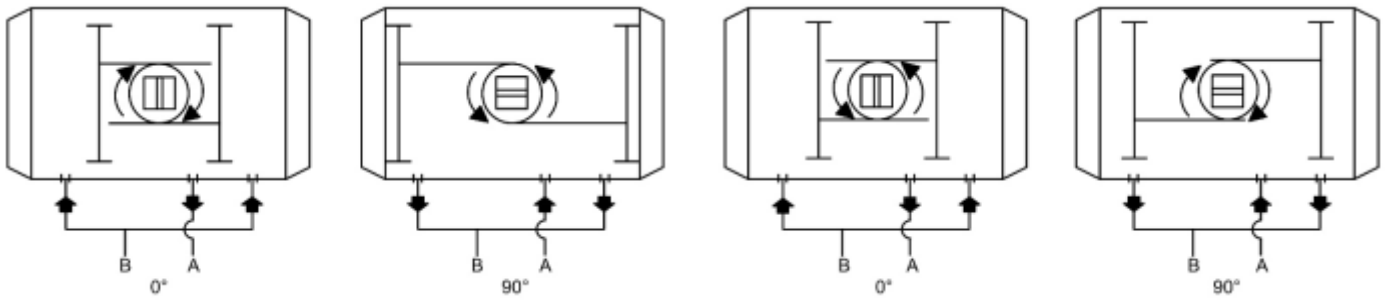

Double Acting Actuator Torque Output Values (Nm)

Model	Air Supply Pressure (bar)									
	2	2.5	3	4	4.5	5	5.5	6	7	8
JAT40DA	6.0	7.6	9.1	12.1	13.6	15.1	16.6	18.1	21.1	24.2
JAT52DA	8.0	10.0	12.0	16.0	18.0	20.0	21.9	23.9	27.9	31.9
JAT63DA	14.6	18.2	21.9	29.2	32.8	36.5	40.1	43.8	51.1	58.4
JAT75DA	20.1	25.1	30.1	40.1	45.1	50.2	55.2	60.2	70.2	80.3
JAT83DA	31.4	39.2	47.0	62.7	70.5	78.4	86.2	94.1	109.7	125.4
JAT92DA	45.1	56.4	67.7	90.3	101.6	112.9	124.1	135.4	158.0	180.6
JAT105DA	66.1	82.7	99.2	132.2	148.8	165.3	181.8	198.4	231.4	264.5
JAT125DA	100.3	125.4	150.5	200.6	225.7	250.8	275.9	301.0	351.1	401.3
JAT140DA	171	213.8	256.5	342.0	384.8	427.5	470.3	513.0	598.5	684.0
JAT160DA	266.0	332.5	399.0	532.0	598.5	665.0	731.5	798.0	931.0	1064.0
JAT190DA	425.6	532.0	638.4	851.2	957.6	1064.0	1170.4	1276.8	1489.6	1702.4
JAT210DA	532.0	665.0	798.0	1064.0	1197.0	1330.0	1463.0	1596.0	1862.0	2128.0
JAT240DA	769.5	961.9	1154.3	1539.0	1731.4	1923.8	2116.1	2308.5	2693.0	3078.0
JAT270DA	1169.0	1462.0	1754.5	2339.3	2631.7	2924.1	3216.5	3508.9	4093.7	4678.6

Air Separator

CORVALVE

Molten air and gases in service water turn into gas with the increase of water temperature and start to circulate with water in installation. Metal materials in the installation may cause noise, circulation impairments and cavitation in pumps just as corrosion Air penetration into radiators will lead to heat problems. As there is constant air intake into the system especially in installations without oxygen barrier where plastic pipe is used and underfloor heating installations, this problem is bigger.

Advantage of air separators;

-Ensures air discharge separating the air in the system.
-The air is continuously discharged while the system is in operation during air discharge without a need tostop the pump.
-There is nodular valve connecting plug at the base of the product to discharge potential air accumulation.

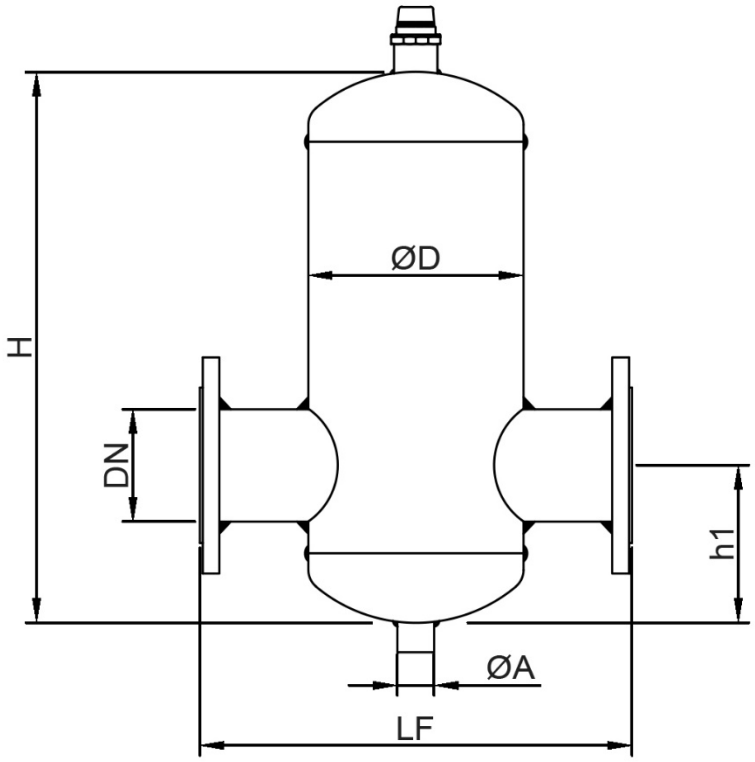

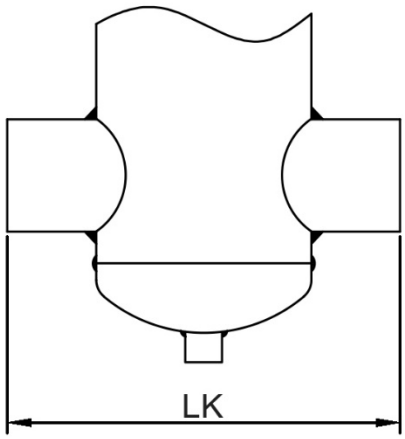

MAXIMUM OPERATING PRESSURE : 10 BAR MAXIMUM OPERATING TEMPERATURE : 110 °C HOUSING: CARBON STEEL

Connection Diameter		Dimensions					
DN	Inch	ØD	LK	LF	H	h1	ØA
20	3/4"	88.9	190	240	230	80	1/2"
25	1"	88.9	190	240	230	80	1/2"
32	1 1 /4"	88.9	190	240	230	80	1/2"
40	1 1 /2"	114.3	225	260	270	105	1/2"
50	2"	114.3	280	280	350	125	1/2"
65	2 1/2"	139.7	315	315	430	140	1/2"
80	3"	168.3	365	365	470	165	1/2"
100	4"	219.1	420	420	490	175	1/2"
125	5"	273	475	475	620	215	1"
150	6"	273	500	500	640	260	1"
200	8"	400	715	715	850	275	1"
250	10"	400	750	750	1000	300	2"
300	12"	500	780	780	1240	325	2"

Thanks to a magnificent hydraulic balancing, an efficient operation is ensured where more than one or cooling group is used or in multi-pump systems. As well as hydraulic balance, it is very important to separate the air and residue in the system. Hydraulic balance and air separation could be ensured with a single product. Thus, four installation connection will be enough instead of eight. Advantage is gained in respect of both first investment and installation and workmanship costs.

Balancing Tank With Dirt And Air Separator

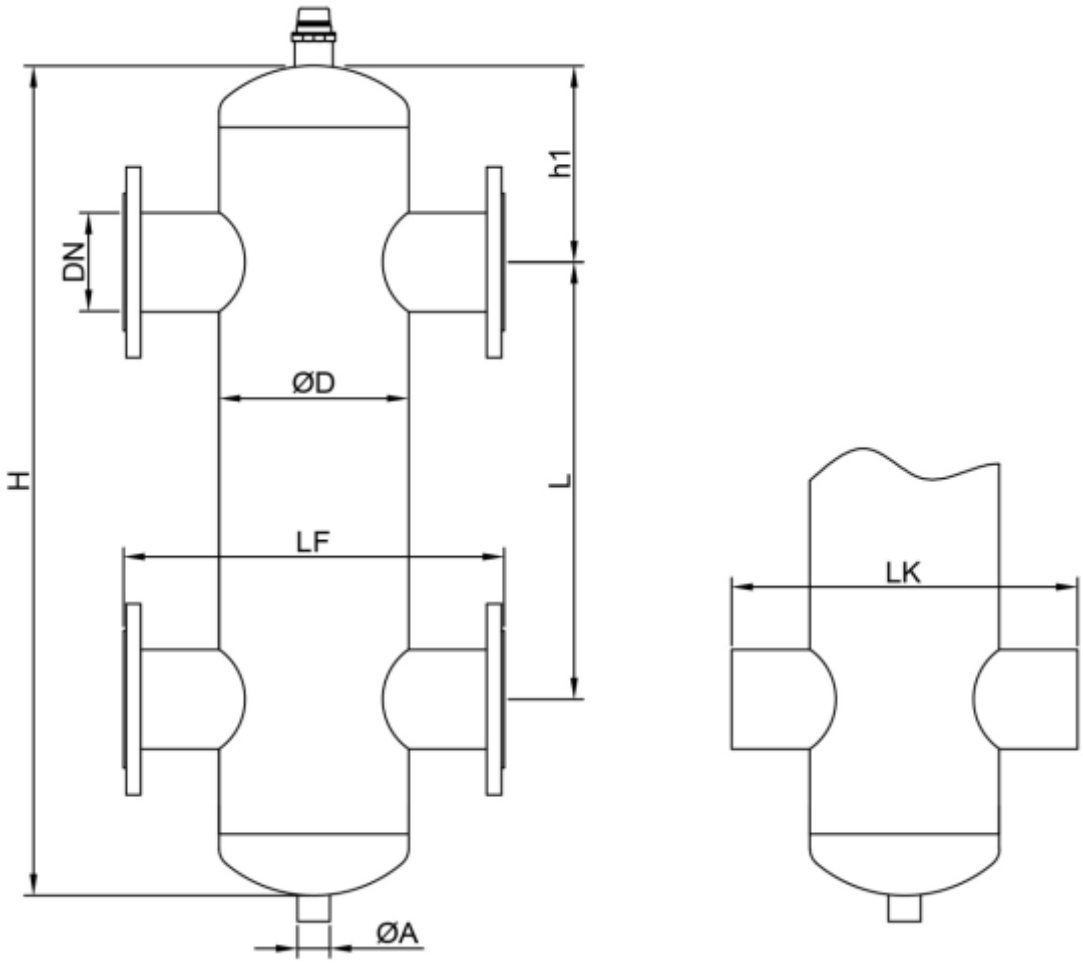

MAXIMUM OPERATING PRESSURE : 10 BAR MAXIMUM OPERATING TEMPERATURE : 110 °C HOUSING: CARBON STEEL

Connection Diameter		Dimensions						
DN	Inch	ØD	LK	LF	L	H	h1	ØA
20	3/4"	88.9	190	240	180	340	80	1/2"
25	1"	88.9	190	240	180	410	80	1/2"
32	1 1 /4"	88.9	190	240	180	510	80	1/2"
40	1 1 /2"	114.3	225	260	215	570	105	1/2"
50	2"	114.3	280	280	265	660	125	1/2"
65	2 1/2"	139.7	315	315	350	730	140	1/2"
80	3"	168.3	365	365	370	860	165	1/2"
100	4"	219.1	420	420	465	1020	175	1/2"
125	5"	273	475	475	545	1260	215	1"
150	6"	273	500	500	730	1400	260	1"
200	8"	400	715	715	880	1540	275	1"
250	10"	400	750	750	1270	1600	300	2"
300	12"	500	780	780	1370	1800	325	2"

Combined Dirt And Air Separator

CORVALVE

It is used to discharge the dirts in service water, molten air and gasses. Both the air and dirts are separated from the system with a single product. It is especially very suitable for cooling installation, it should be mounted on return line of the installation. It can be used in cooling installations where static height is up to 5 meters.

Combined Dirt And Air Separator

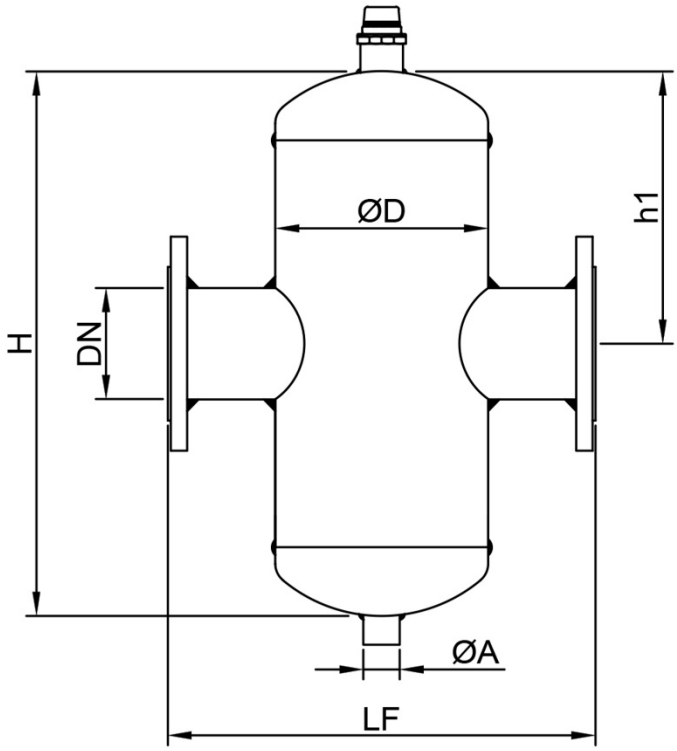

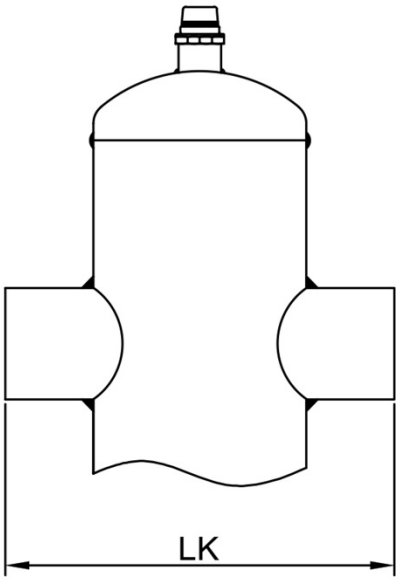

MAXIMUM OPERATING PRESSURE : 10 BAR MAXIMUM OPERATING TEMPERATURE : 110 °C HOUSING: CARBON STEEL

Connection Diameter		Dimensions					
DN	Inch	ØD	LK	LF	H	h1	ØA
20	3/4"	88.9	190	240	230	115	1/2"
25	1"	88.9	190	240	230	115	1/2"
32	1 1 /4"	88.9	190	240	230	115	1/2"
40	1 1 /2"	114.3	225	260	270	135	1/2"
50	2"	114.3	280	280	350	175	1/2"
65	2 1/2"	139.7	315	315	430	215	1/2"
80	3"	168.3	365	365	470	235	1/2"
100	4"	219.1	420	420	490	245	1/2"
125	5"	273	475	475	620	305	1"
150	6"	273	500	500	640	320	1"
200	8"	400	715	715	850	425	1"
250	10"	400	750	750	1000	500	2"
300	12"	500	780	780	1240	620	2"

Dirt Separator

CORVALVE

As a result of oxygen diffusion taking place generally in plastic pipes, there occurs erosion in the installation and residues and dirt due to such erosion start to circulate in the installation. Considering the use of many classical trap filter within the installation;

With the intent of taking out the dirt and residue,trap filters are required to be opened by means of wrench for service. At that time, the system needs to be stopped and comfort is interrupt. Separator residue and dirt separator is used one piece per installation. Opening the nodular valve at the bottom of the product to discharge dirt, it is easily thrown out. There is no need to stop the system. Residue and dirt inside the water cause failures, abrasion and performance decrease in pumps, motorized valve and other armatures, constantly increasing maintenance requirements and corrosion. Thanks to this product, difficulties in maintenance and cleaning of classical trap filters are eliminated and likely failures due to such difficulties are prevented.

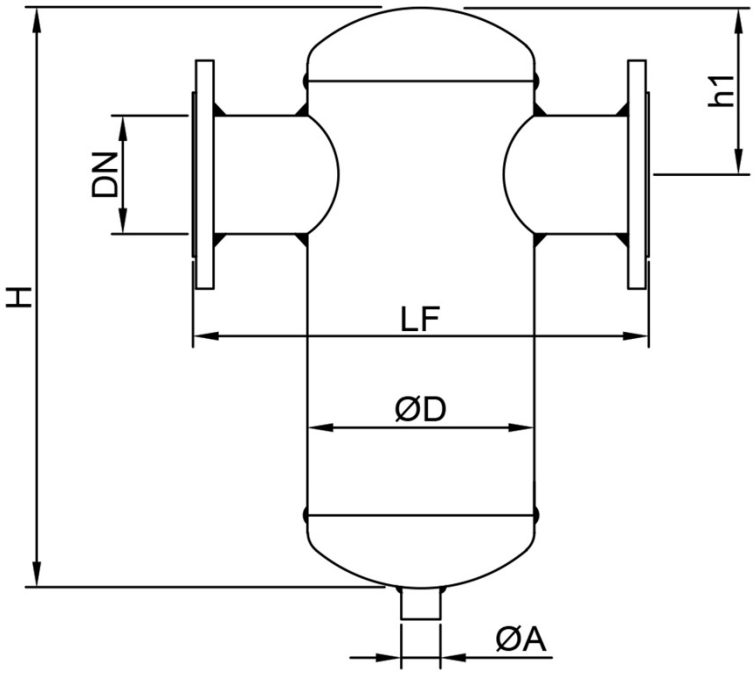

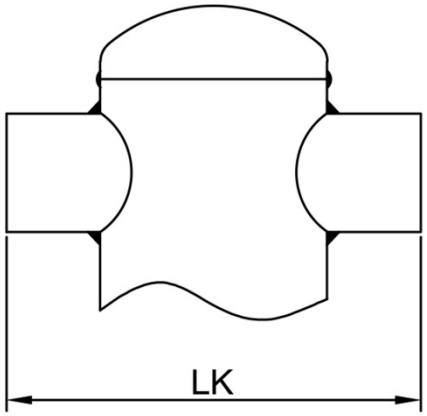

MAXIMUM OPERATING PRESSURE : 10 BAR MAXIMUM OPERATING TEMPERATURE : 110 °C HOUSING: CARBON STEEL

Connection Diameter		Dimensions					
DN	Inch	ØD	LK	LF	H	h1	ØA
20	3/4"	88.9	190	240	230	80	1/2"
25	1"	88.9	190	240	230	80	1/2"
32	1 1 /4"	88.9	190	240	230	80	1/2"
40	1 1 /2"	114.3	225	260	270	105	1/2"
50	2"	114.3	280	280	350	125	1/2"
65	2 1/2"	139.7	315	315	430	140	1/2"
80	3"	168.3	365	365	470	165	1/2"
100	4"	219.1	420	420	490	175	1/2"
125	5"	273	475	475	620	215	1"
150	6"	273	500	500	640	260	1"
200	8"	400	715	715	850	275	1"
250	10"	400	750	750	1000	300	2"
300	12"	500	780	780	1240	325	2"

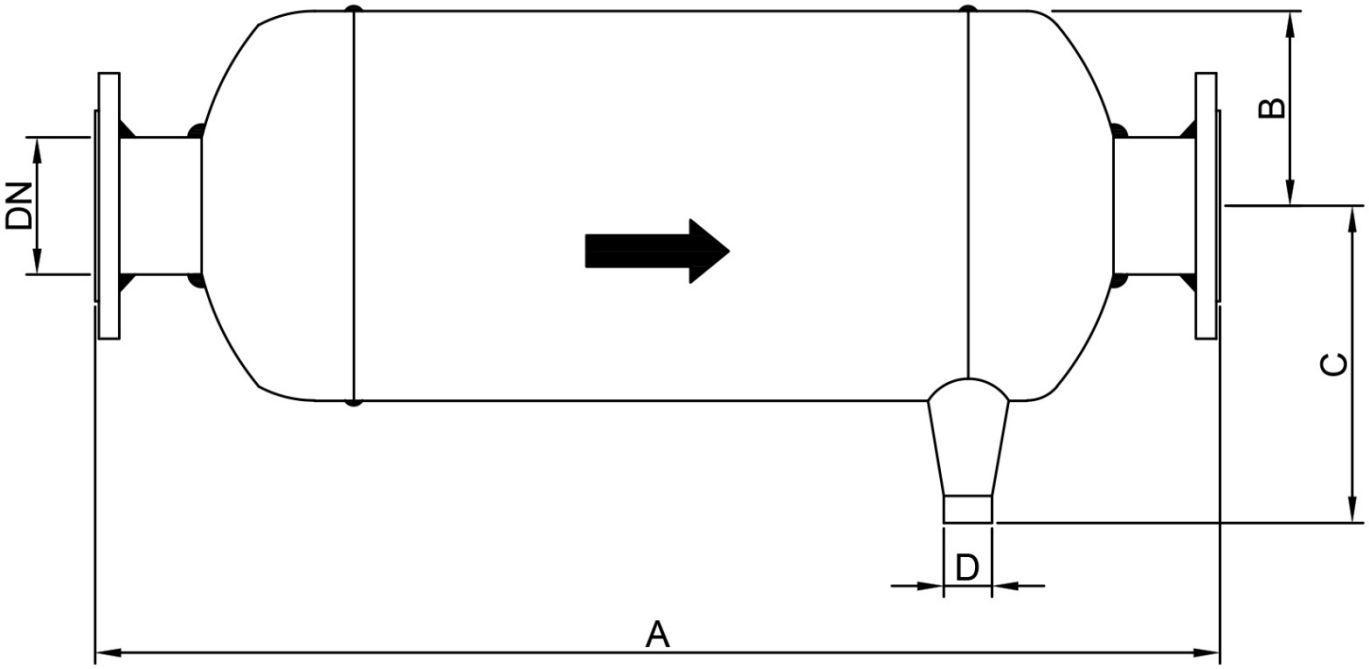

Connection Diameter		Dimensions			
DN	Inch	A	B	C	D
20	3/4"	300	61	171	R1" x 1/2"
25	1"	400	61	171	R1" x 1/2"
32	1 1 /4"	500	74	184	R1" x 1/2"
40	1 1 /2"	500	74	184	R1" x 1/2"
50	2"	500	86	197	R1" x 1/2"
65	2 1/2"	600	112	226	R1" x 1/2"
80	3"	650	139	254	R1" x 1/2"
100	4"	700	172	297	R1" x 1/2"
125	5"	800	188	313	R2" x 1"
150	6"	850	214	340	R2" x 1"
200	8"	1000	240	366	R2" x 1"
250	10"	1300	382	505	R2" x 1"
300	12"	1500	319	442	R2"
350	14"	1650	370	493	R2"

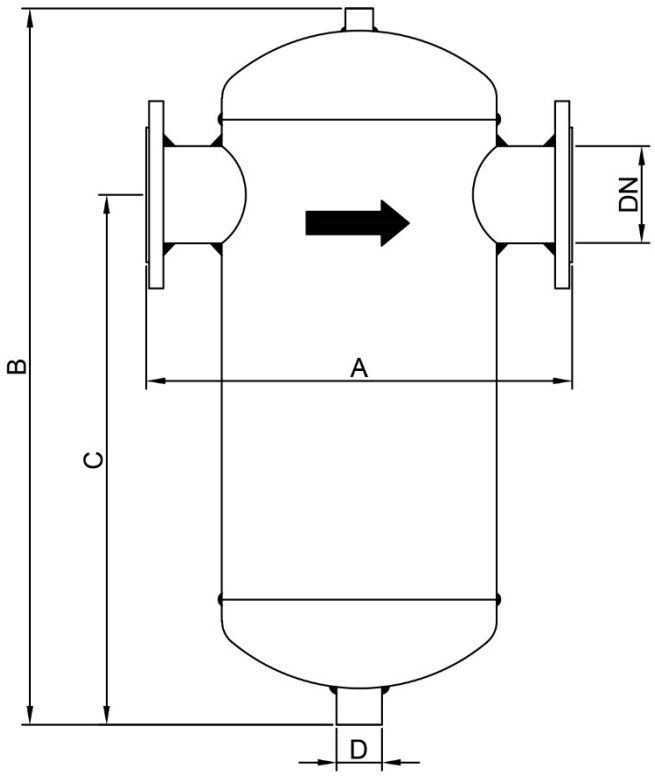

Connection Diameter		Dimensions			
DN	Inch	A	B	C	D
15	1/2"	180	344	262	R1/2"
20	3/4"	230	410	318	R1" x 1/2"
25	1"	230	420	326	R1" x 1/2"
32	1 1 /4"	250	446	335	R1" x 1/2"
40	1 1 /2"	300	487	366	R1" x 1/2"
50	2"	300	513	404	R1" x 1/2"
65	2 1/2"	400	636	501	R1 1/2" x 3/4"
80	3"	450	703	540	R1 x 1/2" x 3/4"
100	4"	500	802	609	R2" x 1"
125	5"	600	957	745	R2" x 1"
150	6"	600	1057	837	R2" x 1"
200	8"	700	1230	988	R2" x 1"
250	10"	850	1770	1370	R2"
300	12"	950	1920	1470	R2"
350	14"	1000	2020	1520	R2"

CORVALVE

CONTACT

TOTALIEN ENDUSTRIYEL URUNLER SAN.TIC.LTD.STI

Phone
+90 216 306 40 44

Email
sales@corvalve.net

Mobile/Whatsapp
+90 542 306 40 43

Fax
+90 216 306 40 44

Address
Soğanlık Yeni Mah. Atatürk Cad.No:6/1
Else Apt.Daire:9,34880 Kartal/İstanbul

ABOUT US

As we Corvalve is a manufacturer of valves, strainers, dismantling joints,separators and a ctuators

Our specialist and dedicated team with the motivation, experience and knowledge about designing and manufacturing to meet your expectations.

With our experienced logistic team, we can deliver the goods to his customer's warehouses, project sites, or anywhere that customer requested with optional delivery terms from factory to Door to Door.

We would be glad to support our valuable customers at their projects with our high-quality services.

www.corvalve.net

a totalien brand